REPORT DOCUMENTATION PAGE

Form Approved
OMB No. 0704-0188

Public reporting burden for this collection of information is estimated to average 1 hour per response, including the time for reviewing instructions, searching existing data sources, gathering and maintaining the data needed, and completing and reviewing this collection of information. Send comments regarding this burden estimate or any other aspect of this collection of information, including suggestions for reducing this burden to Department of Defense, Washington Headquarters Services, Directorate for Information Operations and Reports (0704-0188), 1215 Jefferson Davis Highway, Suite 1204, Arlington, VA 22202-4302. Respondents should be aware that notwithstanding any other provision of law, no person shall be subject to any penalty for failing to comply with a collection of information if it does not display a currently valid OMB control number. PLEASE DO NOT RETURN YOUR FORM TO THE ABOVE ADDRESS.

1. REPORT DATE (DD-MM-YYYY)	2. REPORT TYPE	3. DATES COVERED (From - To)
	Technical Paper	See Attached List

4. TITLE AND SUBTITLE	5a. CONTRACT NUMBER
See Attached List	N/A
	5b. GRANT NUMBER
	N/A
	5c. PROGRAM ELEMENT NUMBER
	N/A
6. AUTHOR(S)	5d. PROJECT NUMBER
	N/A
See Attached List	5e. TASK NUMBER
	N/A
	5f. WORK UNIT NUMBER
	N/A
7. PERFORMING ORGANIZATION NAME(S) AND ADDRESS(ES)	8. PERFORMING ORGANIZATION REPORT NUMBER
See Attached List	N/A
9. SPONSORING / MONITORING AGENCY NAME(S) AND ADDRESS(ES)	10. SPONSOR/MONITOR'S ACRONYM(S)
Kristi Laug AFRL/PROP 1950 Fifth Street Wright-Patterson AFB OH 45433 937-255-3362	N/A
	11. SPONSOR/MONITOR'S REPORT NUMBER(S)
	N/A

12. DISTRIBUTION / AVAILABILITY STATEMENT

Distribution Statement A: Approved for public release; distribution is unlimited.

13. SUPPLEMENTARY NOTES

N/A

14. ABSTRACT

20021231 045

15. SUBJECT TERMS

16. SECURITY CLASSIFICATION OF: UNCLASSIFIED			17. LIMITATION OF ABSTRACT	18. NUMBER OF PAGES	19a. NAME OF RESPONSIBLE PERSON
a. REPORT	b. ABSTRACT	c. THIS PAGE	Unlimited Distribution	See Attached List	Kristi Laug
					19b. TELEPHONE NUMBER (include area code) 937-255-3362

PL(OLAC)/RKAS Concentrator Information

February 11, 1993

This package contains information on the PL(OLAC)/RKAS solar concentrator for those who need to do modeling or other calculations. It contains the original design drawings, a map showing damaged concentrator facets, modeled solar flux, and a list of the approximate facet center positions. Measured flux data will be added to this package after we can realign our concentrator facets. We will also try to keep this information up to date as changes are made. Use this data at your own risk. We are willing to assist so please call, write, or email if you need anything.

The concentrator design drawings are accurate to the best of our knowledge. We used dimensions from the drawings to calculate the facet center positions for our own models (using some approximations). These approximate facet center positions are listed separately or you can get these electronically if you prefer. They are listed in (x, y, z) format. The coordinate system is right-handed with the x axis pointing up, the y axis pointing horizontally, and the z axis pointing towards the focal point. The origin is at the concentrator vertex. We have found that the calculated facet z components are within a centimeter. The x and y components could be off by several centimeters in the azimuthal direction. The magnitude of the x and y components, $\sqrt{x^2 + y^2}$, is believed to be accurate to within a few millimeters.

The facets have two different values depending on which ring they are in (ring 1 is the closest to the concentrator center and ring 8 is the outermost). Facets in rings 1 through 5 have a focal length of 4.33 ± 0.03 meters. Facets in rings 6 through 8 have a focal length of 4.61 ± 0.03 meters. A number of facets are broken or missing. The cracks have been overlayed on a concentrator facet drawing (note the facets are not quite the proper shape in this drawing). Some of the cracks cause only slight problems. others give slope errors on the order of 5 milliradians. Other facets are completely missing (filled in on drawing), or covered (by a water based paint) because of the severity of the cracks. Also note that the gap that seperates neighboring facet reflecting surfaces is approximately one half of a centimeter.

We ran our concentrator model and plotted results for the target-plane placed at three different positions: 4.05, 4.10, and 4.15 meters from the concentrator vertex. The model assumed the concentrator focal point to be at 4.15 meters from the concentrator vertex. This package contains a contour plot and a surface plot for each position. These plots use the same scale; The plot boundaries extend from -10 cm to +10 cm from the target center in both target dimensions. The surface plot intensity scale is the same for all surface plots. The label of each plot reveals the assumed total slope error, 1.5 milliradians, the focal point of the concentrator, 4.15 meters, and the target position. The heliostat is assumed to reflect 90% of the incident light and the concentrator is assumed to reflect 94%

of the light from heliostat. The incident solar flux at the heliostat is assumed to be 1000 watts/meter^2. These values assume optimal weather conditions, and well cleaned optical surfaces. The contour plot for the target at 4.15 meters shows that 10,350 suns (14,000,000 watts/meter^2) can be achieved at the center of the target under these conditions.

Michael R. Holmes
PL(OLAC)/RKAS
Edwards AFB, CA 93524-7190
(805) 275-5615: Voice
(805) 275-5507: FAX
(805) 275-5144: Alternate FAX
holmes@solar.ple.af.mil (192.42.141.185): Email address

1.5−4.15−4.15.BIN

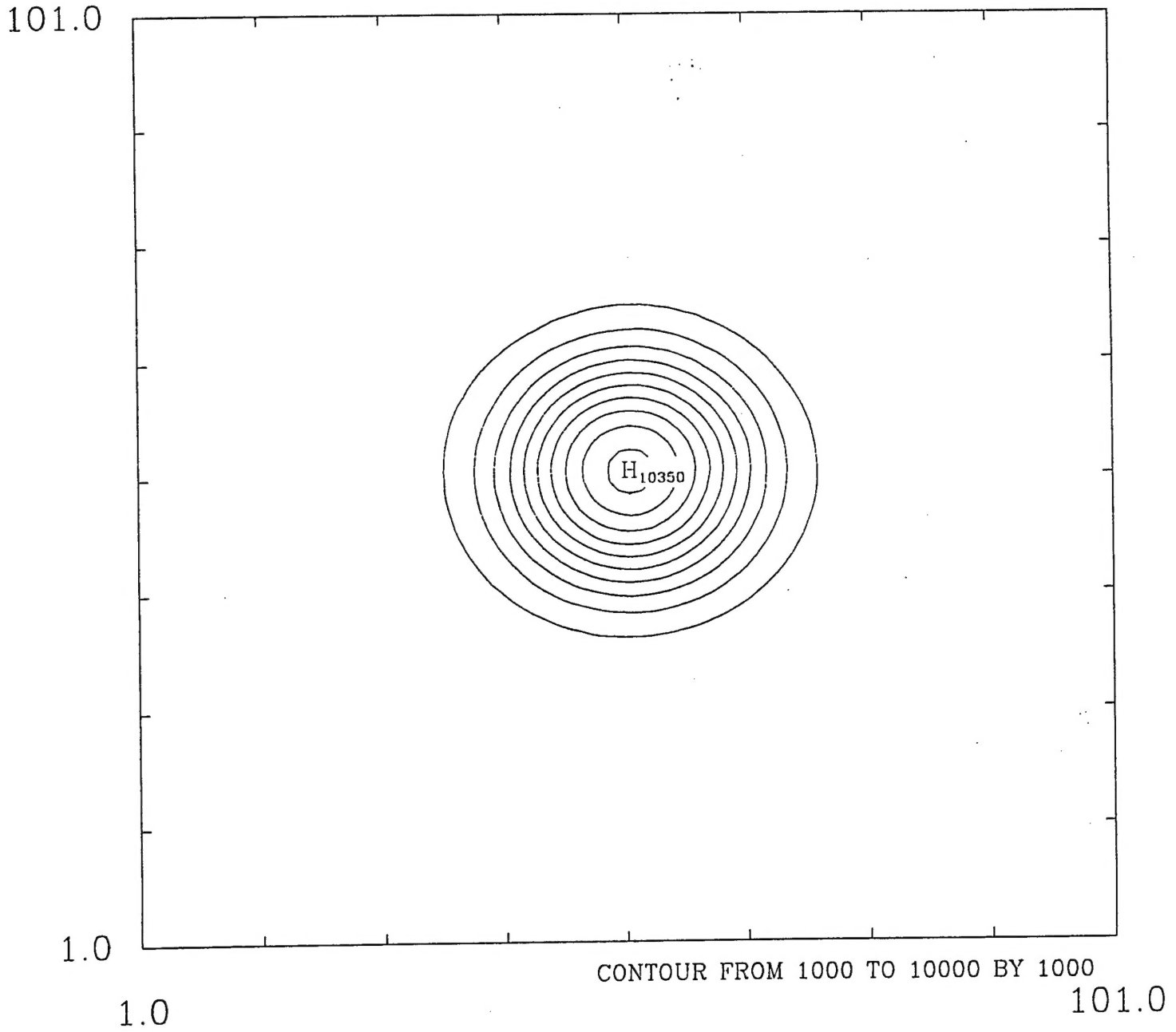

1.5−4.15−4.15.BIN

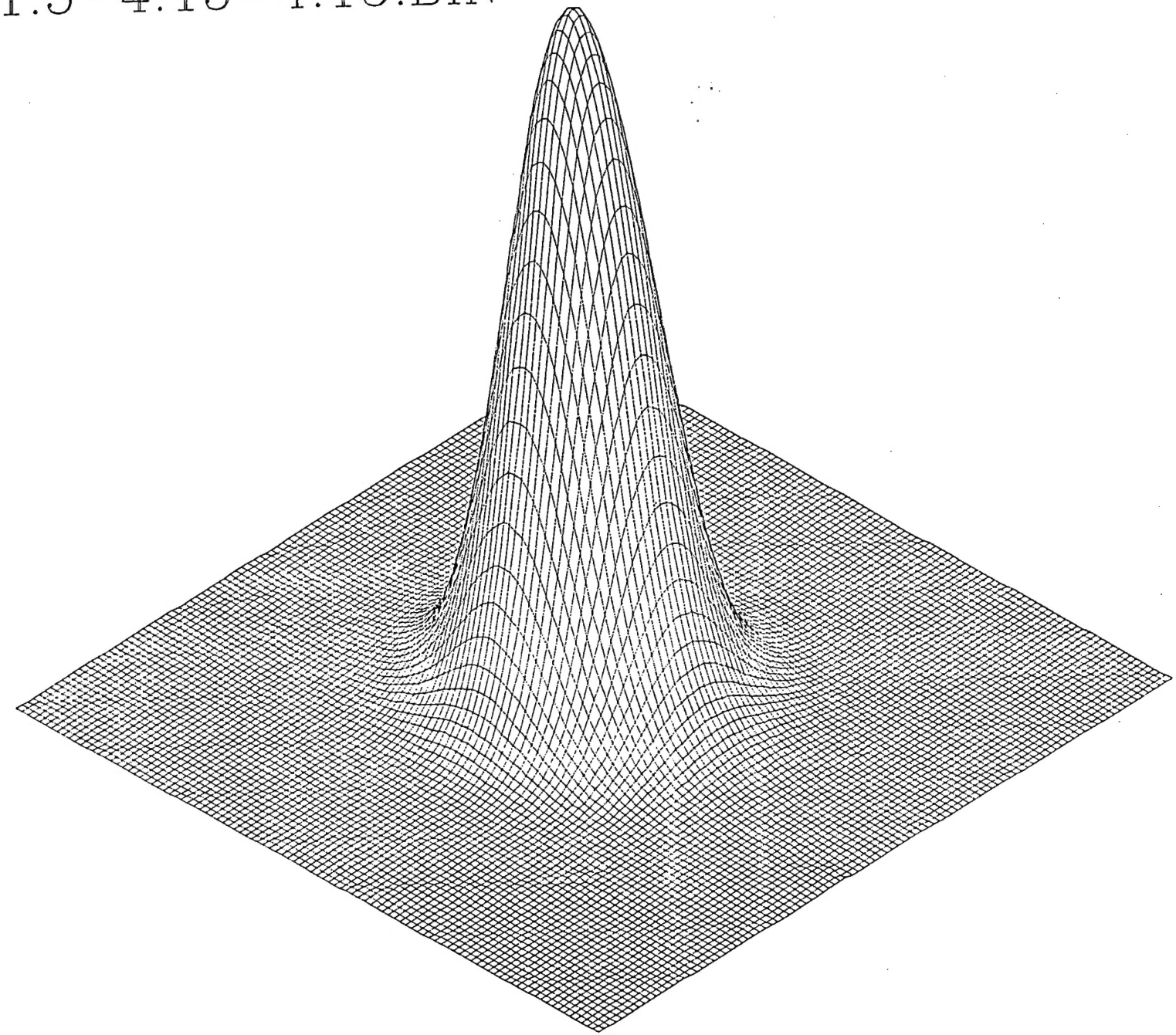

1.5−4.15−4.10.BIN

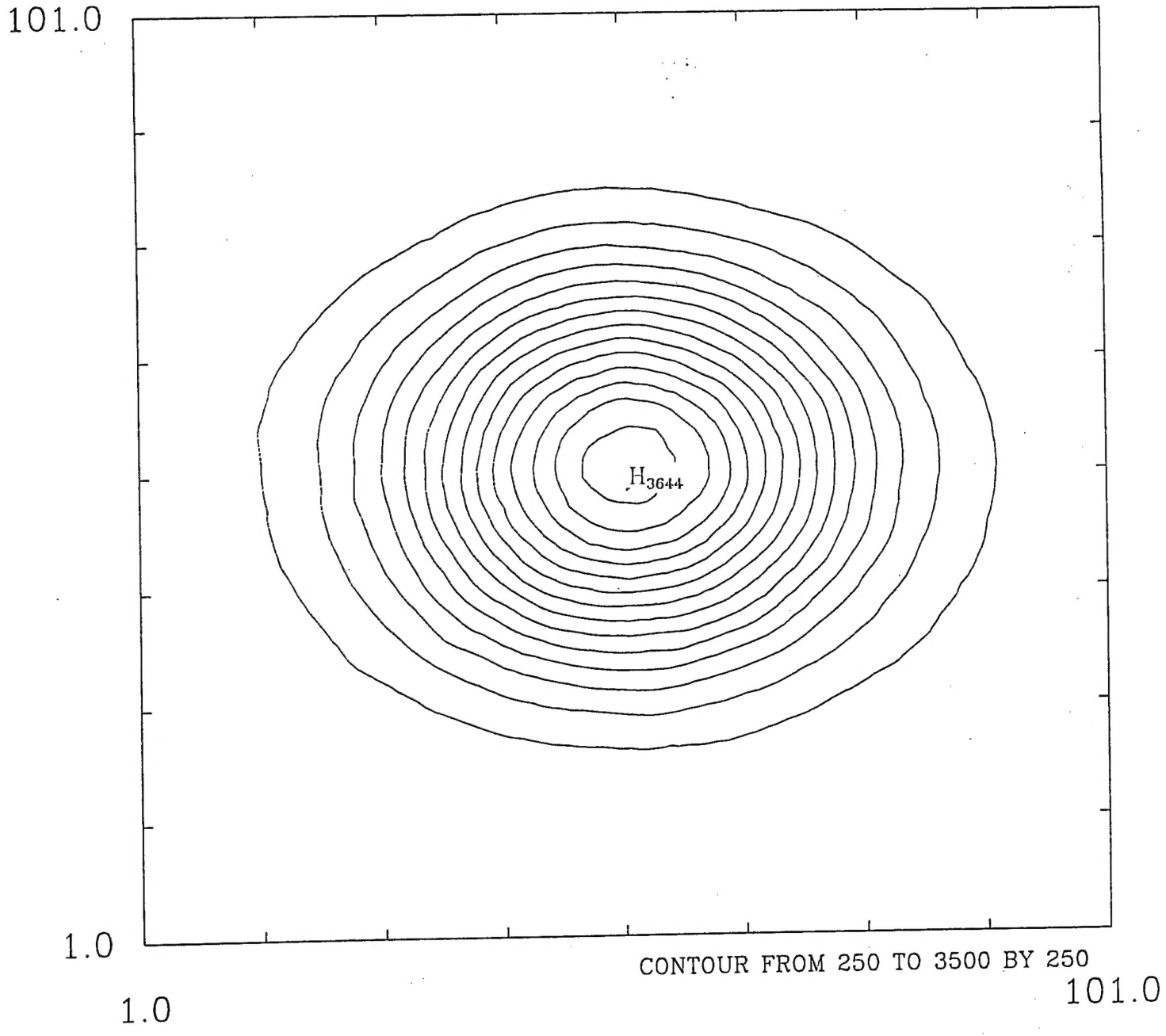

1.5−4.15−4.10.BIN

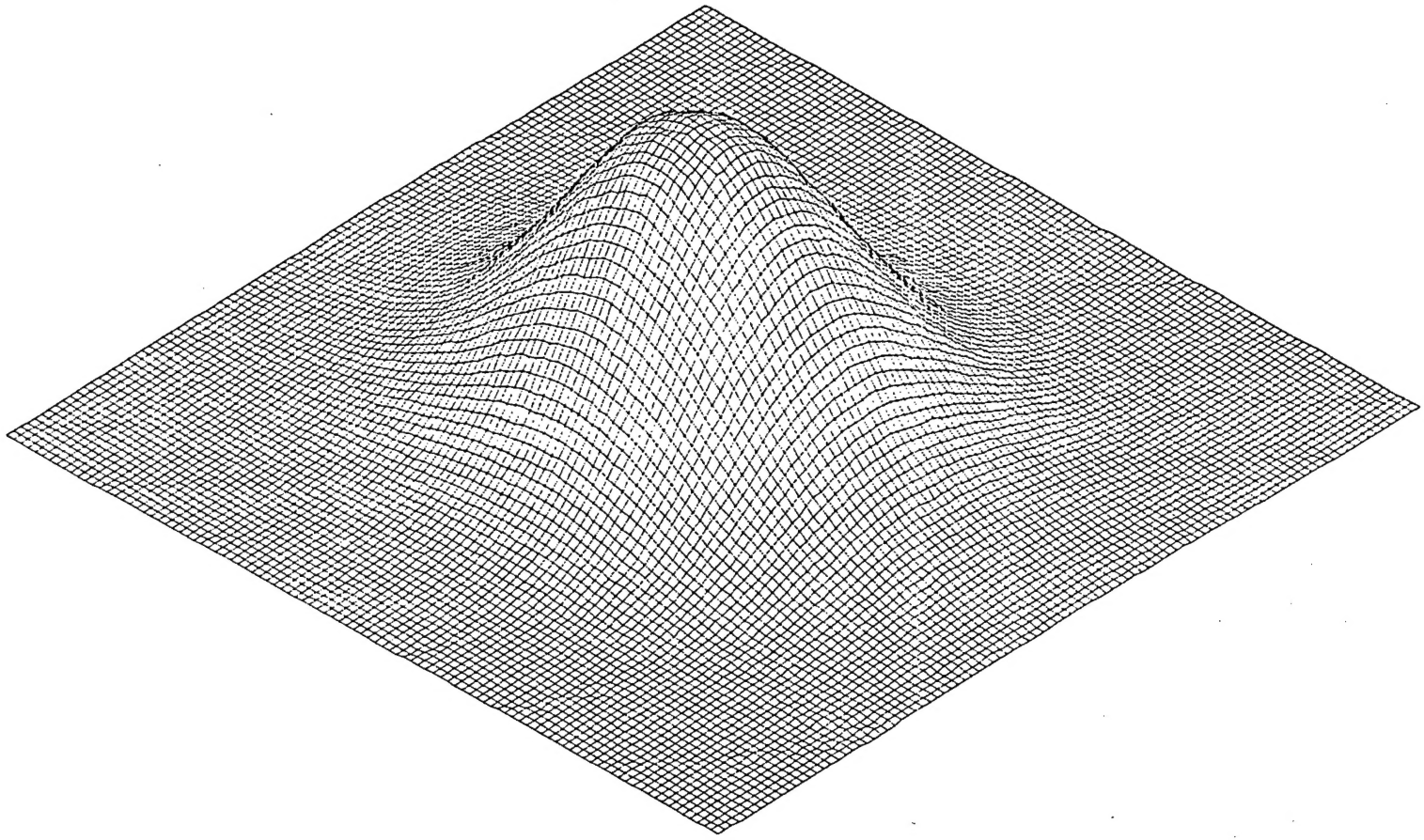

1.5−4.15−4.05.BIN

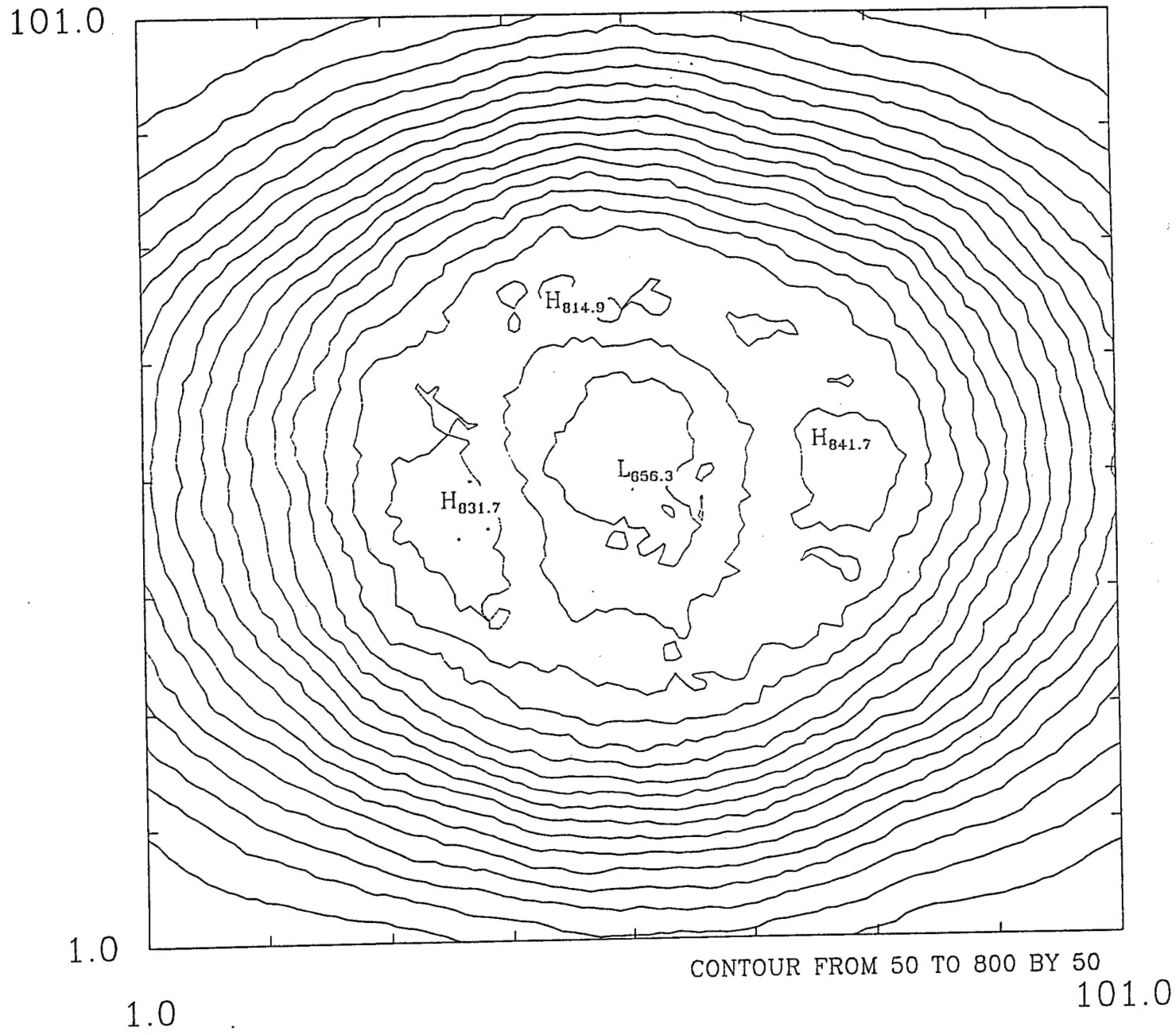

1.5−4.15−4.05.BIN

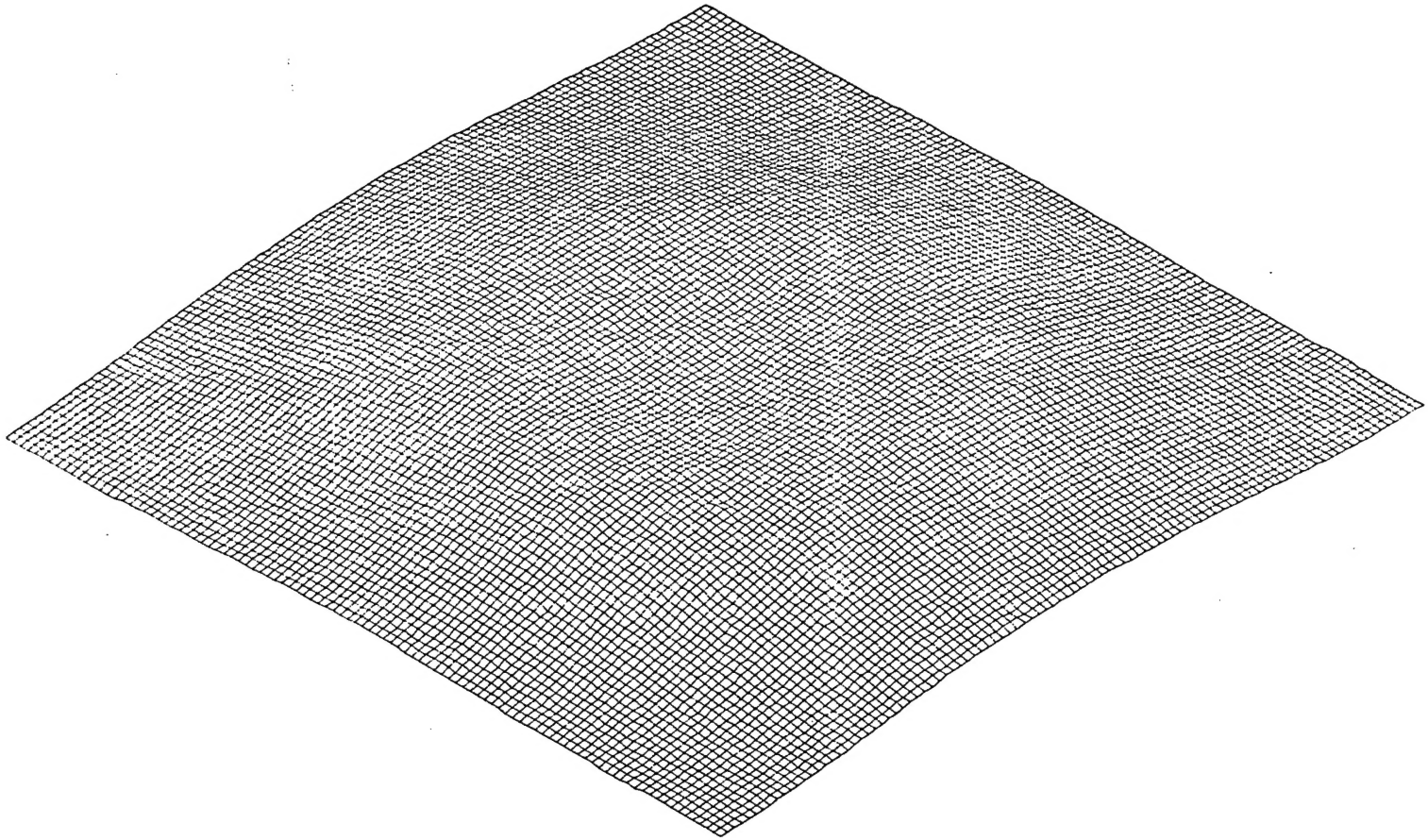

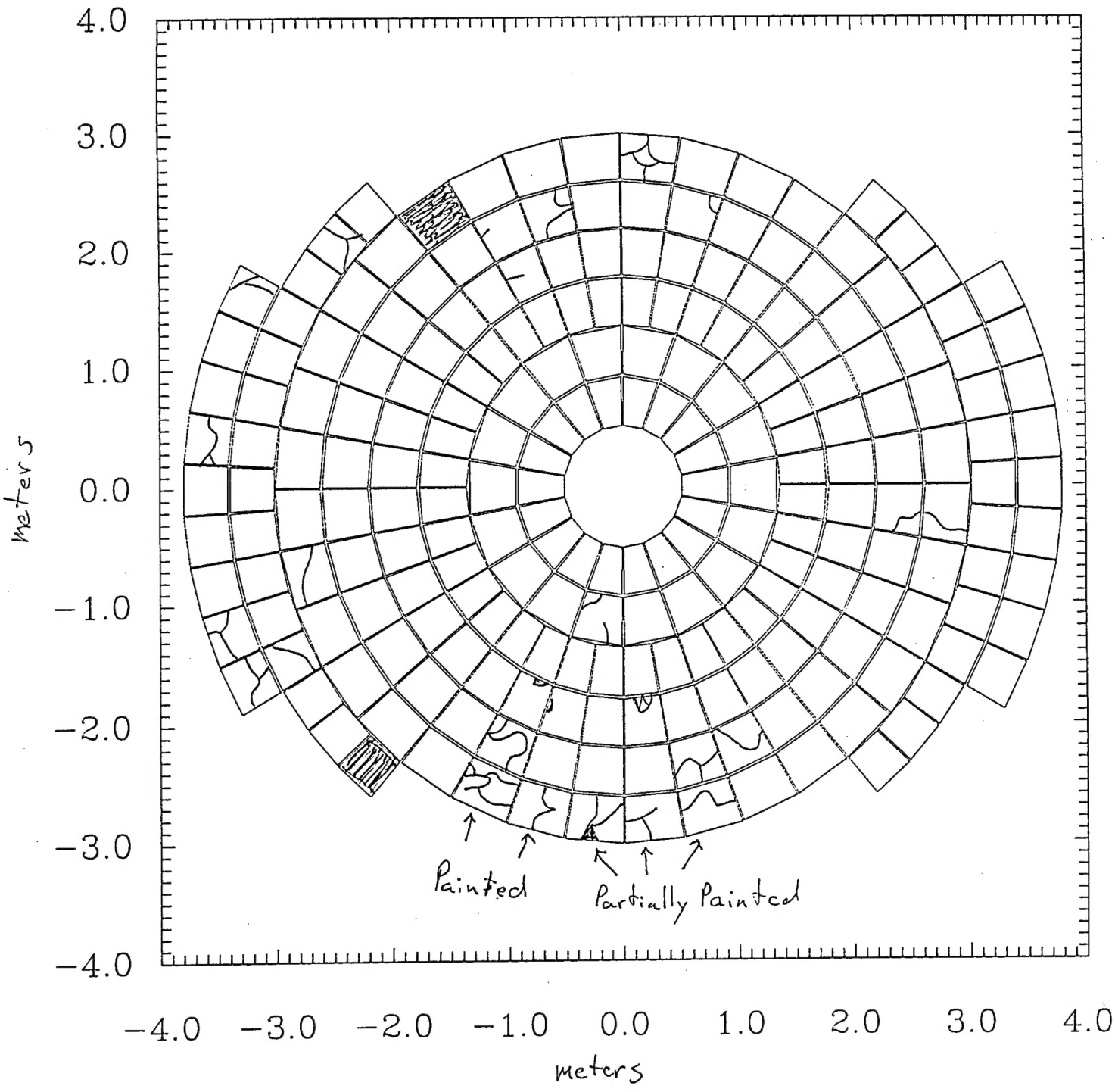
4.0
3.0
2.0
1.0
0.0
−1.0
−2.0
−3.0
−4.0
meters
−4.0 −3.0 −2.0 −1.0 0.0 1.0 2.0 3.0 4.0
meters
Painted
Partially Painted

```
 0.709,      0.000,      0.189
 0.666,      0.242,      0.189
 0.543,      0.455,      0.189
 0.354,      0.614,      0.189
 0.123,      0.698,      0.189
-0.123,      0.698,      0.189
-0.354,      0.614,      0.189
-0.543,      0.455,      0.189
-0.666,      0.242,      0.189
-0.709,      6.368,      0.189
-0.666,     -0.242,      0.189
-0.543,     -0.455,      0.189
-0.354,     -0.614,      0.189
-0.123,     -0.698,      0.189
 0.123,     -0.698,      0.189
 0.354,     -0.614,      0.189
 0.543,     -0.455,      0.189
 0.666,     -0.242,      0.189
 1.132,      0.000,      0.246
 1.064,      0.387,      0.246
 0.867,      0.727,      0.246
 0.566,      0.980,      0.246
 0.196,      1.115,      0.246
-0.196,      1.115,      0.246
-0.566,      0.980,      0.246
-0.867,      0.727,      0.246
-1.064,      0.387,      0.246
-1.132,      1.016,      0.246
-1.064,     -0.387,      0.246
-0.867,     -0.727,      0.246
-0.566,     -0.980,      0.246
-0.196,     -1.115,      0.246
 0.196,     -1.115,      0.246
 0.566,     -0.980,      0.246
 0.867,     -0.727,      0.246
 1.064,     -0.387,      0.246
 1.549,      0.135,      0.314
 1.502,      0.402,      0.314
 1.410,      0.657,      0.314
 1.274,      0.892,      0.314
 1.100,      1.100,      0.314
 0.892,      1.274,      0.314
 0.657,      1.410,      0.314
 0.402,      1.502,      0.314
 0.135,      1.549,      0.314
-0.135,      1.549,      0.314
-0.402,      1.502,      0.314
-0.657,      1.410,      0.314
-0.892,      1.274,      0.314
-1.100,      1.100,      0.314
-1.274,      0.892,      0.314
-1.410,      0.657,      0.314
-1.502,      0.402,      0.314
-1.549,      0.135,      0.314
-1.549,     -0.135,      0.314
-1.502,     -0.402,      0.314
-1.410,     -0.657,      0.314
-1.274,     -0.892,      0.314
-1.100,     -1.100,      0.314
-0.892,     -1.274,      0.314
-0.657,     -1.410,      0.314
-0.402,     -1.502,      0.314
-0.135,     -1.549,      0.314
 0.135,     -1.549,      0.314
 0.402,     -1.502,      0.314
 0.657,     -1.410,      0.314
 0.892,     -1.274,      0.314
 1.100,     -1.100,      0.314
 1.274,     -0.892,      0.314
 1.410,     -0.657,      0.314
 1.502,     -0.402,      0.314
 1.549,     -0.135,      0.314
 1.972,      0.172,      0.407
 1.912,      0.512,      0.407
 1.794,      0.836,      0.407
 1.621,      1.135,      0.407
 1.399,      1.399,      0.407
 1.135,      1.621,      0.407
 0.836,      1.794,      0.407
 0.512,      1.912,      0.407
```

0.172,	1.972,	0.407
0.172,	1.972,	0.407
0.512,	1.912,	0.407
0.836,	1.794,	0.407
-1.135,	1.621,	0.407
-1.399,	1.399,	0.407
-1.621,	1.135,	0.407
-1.794,	0.836,	0.407
-1.912,	0.512,	0.407
-1.972,	0.172,	0.407
-1.972,	-0.172,	0.407
-1.912,	-0.512,	0.407
-1.794,	-0.836,	0.407
-1.621,	-1.135,	0.407
-1.399,	-1.399,	0.407
-1.135,	-1.621,	0.407
-0.836,	-1.794,	0.407
-0.512,	-1.912,	0.407
-0.172,	-1.972,	0.407
0.172,	-1.972,	0.407
0.512,	-1.912,	0.407
0.836,	-1.794,	0.407
1.135,	-1.621,	0.407
1.399,	-1.399,	0.407
1.621,	-1.135,	0.407
1.794,	-0.836,	0.407
1.912,	-0.512,	0.407
1.972,	-0.172,	0.407
2.381,	0.208,	0.520
2.309,	0.618,	0.520
2.166,	1.010,	0.520
1.958,	1.371,	0.520
1.690,	1.690,	0.520
1.371,	1.958,	0.520
1.010,	2.166,	0.520
0.618,	2.309,	0.520
0.208,	2.381,	0.520
-0.208,	2.381,	0.520
-0.618,	2.309,	0.520
-1.010,	2.166,	0.520
-1.371,	1.958,	0.520
-1.690,	1.690,	0.520
-1.958,	1.371,	0.520
-2.166,	1.010,	0.520
-2.309,	0.618,	0.520
-2.381,	0.208,	0.520
-2.381,	-0.208,	0.520
-2.309,	-0.618,	0.520
-2.166,	-1.010,	0.520
-1.958,	-1.371,	0.520
-1.690,	-1.690,	0.520
-1.371,	-1.958,	0.520
-1.010,	-2.166,	0.520
-0.618,	-2.309,	0.520
-0.208,	-2.381,	0.520
0.208,	-2.381,	0.520
0.618,	-2.309,	0.520
1.010,	-2.166,	0.520
1.371,	-1.958,	0.520
1.690,	-1.690,	0.520
1.958,	-1.371,	0.520
2.166,	-1.010,	0.520
2.309,	-0.618,	0.520
2.381,	-0.208,	0.520
2.792,	0.244,	0.644
2.707,	0.725,	0.644
2.540,	1.184,	0.644
2.296,	1.607,	0.644
1.981,	1.981,	0.644
1.607,	2.296,	0.644
1.184,	2.540,	0.644
0.725,	2.707,	0.644
0.244,	2.792,	0.644
-0.244,	2.792,	0.644
-0.725,	2.707,	0.644
-1.184,	2.540,	0.644
-1.607,	2.296,	0.644
-1.981,	1.981,	0.644
-2.296,	1.607,	0.644
-2.540,	1.184,	0.644

-2.707,	0.725,	0.644
-2.792,	0.244,	0.644
-2.792,	-0.244,	0.644
-2.707,	-0.725,	0.644
-2.540,	-1.184,	0.644
-2.296,	-1.607,	0.644
-1.981,	-1.981,	0.644
-1.607,	-2.296,	0.644
-1.184,	-2.540,	0.644
-0.725,	-2.707,	0.644
-0.244,	-2.792,	0.644
0.244,	-2.792,	0.644
0.725,	-2.707,	0.644
1.184,	-2.540,	0.644
1.607,	-2.296,	0.644
1.981,	-1.981,	0.644
2.296,	-1.607,	0.644
2.540,	-1.184,	0.644
2.707,	-0.725,	0.644
2.792,	-0.244,	0.644
3.202,	0.000,	0.813
3.180,	0.371,	0.813
3.116,	0.738,	0.813
3.009,	1.095,	0.813
2.861,	1.437,	0.813
2.675,	1.759,	0.813
2.453,	2.058,	0.813
2.197,	2.329,	0.813
-2.197,	2.329,	0.813
-2.453,	2.058,	0.813
-2.675,	1.759,	0.813
-2.861,	1.437,	0.813
-3.009,	1.095,	0.813
-3.116,	0.738,	0.813
-3.180,	0.371,	0.813
-3.202,	2.875,	0.813
-3.180,	-0.371,	0.813
-3.116,	-0.738,	0.813
-3.009,	-1.095,	0.813
-2.861,	-1.437,	0.813
-2.675,	-1.759,	0.813
-2.453,	-2.058,	0.813
-2.197,	-2.329,	0.813
2.197,	-2.329,	0.813
2.453,	-2.058,	0.813
2.675,	-1.759,	0.813
2.861,	-1.437,	0.813
3.009,	-1.095,	0.813
3.116,	-0.738,	0.813
3.180,	-0.371,	0.813
3.602,	0.000,	0.994
3.577,	0.418,	0.994
3.505,	0.830,	0.994
3.384,	1.232,	0.994
3.219,	1.616,	0.994
-3.219,	1.616,	0.994
-3.384,	1.232,	0.994
-3.505,	0.830,	0.994
-3.577,	0.418,	0.994
-3.602,	3.234,	0.994
-3.577,	-0.418,	0.994
-3.505,	-0.830,	0.994
-3.384,	-1.232,	0.994
-3.219,	-1.616,	0.994
3.219,	-1.616,	0.994
3.384,	-1.232,	0.994
3.505,	-0.830,	0.994
3.577,	-0.418,	0.994

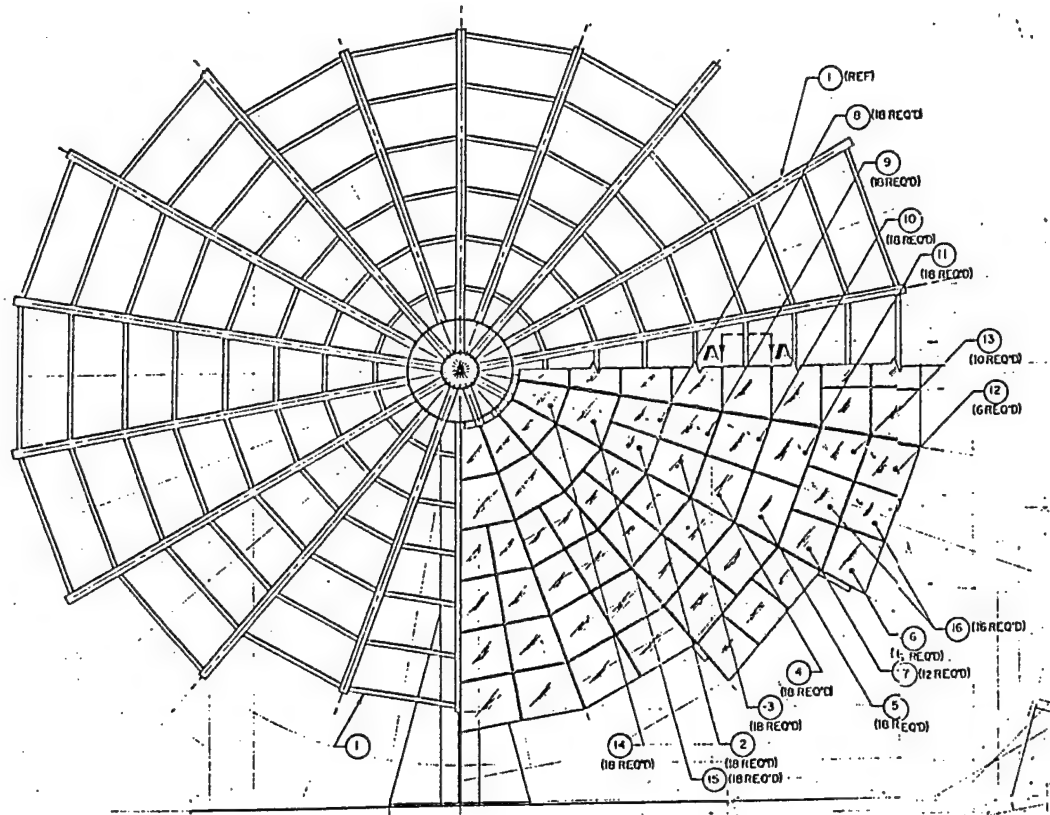

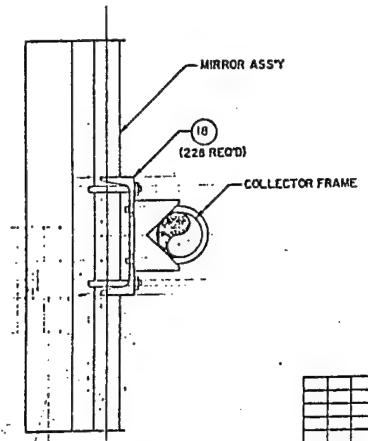

SECT A A
TYP MIRROR INST'L
SCALE: HALF

D/L

QTY REQ'D PER DASH NO	SYM	NOMENCLATURE	CODE IDENT	IDENTIFYING NO.	MATERIAL / SPECIFICATION	FIND NO.
		PARTS LIST				
2	228	BRACKET MIRROR		X020006		20
4	16	MIRROR ASS'Y		X020099-50		19
2	16			X020099-30		18
2	16			X020099-10		17
2	12	MIRROR R/H ASS'Y		X020098-50		16
2	6			-110		15
2	16			-70		14
2	16			-50		13
2	16			-30		12
2	16			X020098-10		11
2	12	MIRROR L/H ASS'Y		X020097-50		10
2	6			-110		9
2	16			-70		8
2	16			-50		7
2	16			-30		6
2	16			X020097-10		5
2		COLLECTOR INST'L		X020152-10		4
		COLLECTOR ASS'Y		-10		3
						2
						1

U.S. AIR FORCE

SOLAR COLLECTOR
ASSEMBLY
SOLAR ROCKET STUDIES

07870 | E | X828095

SCALE NONE | SHEET 1 OF 1

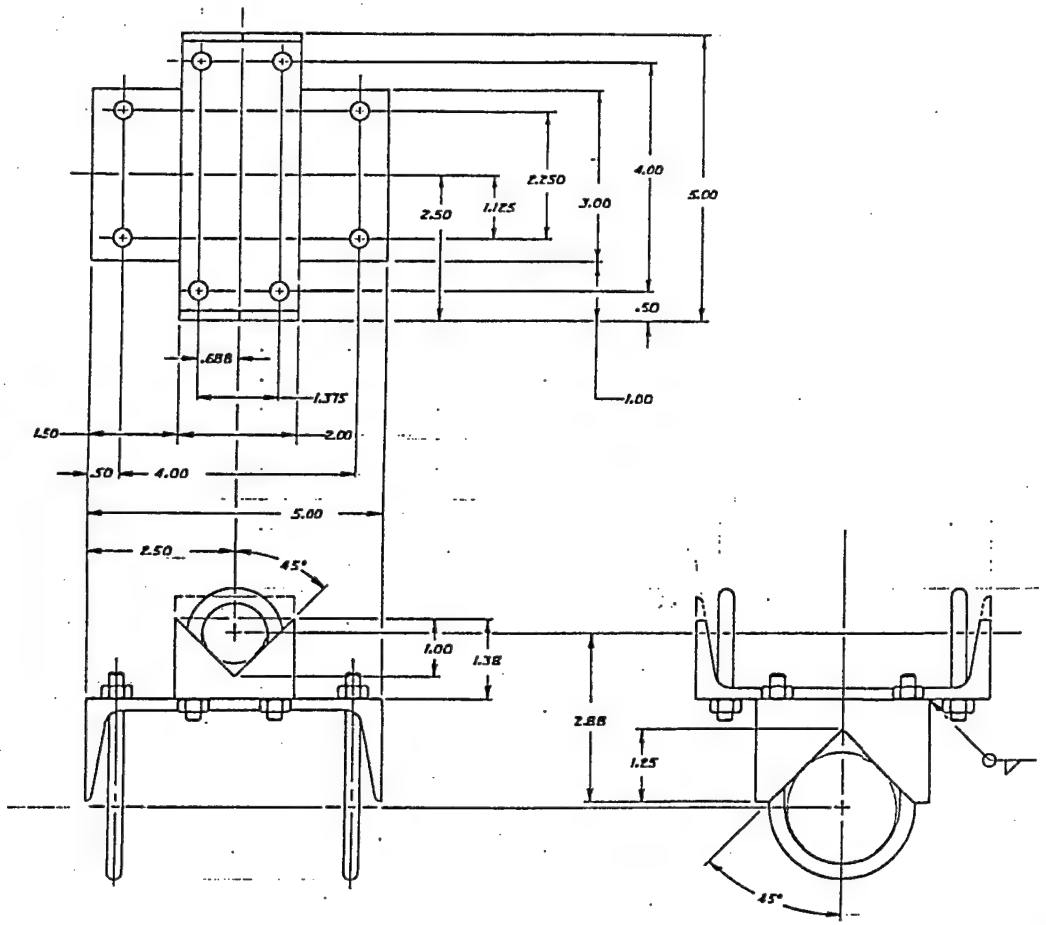

2		U-BOLT 1 1/2 PIPE		3043T21	MS MASTER-CARR OR EQUAL			4
2		U-BOLT 3/4 PIPE		3043T15	CATALOG 87 RP.307			3
1		BRACKET UPPER		-03	QQ-A-200/8 SC 2.32 × 2.00			2
1		BRACKET LOWER		-01	6061 ALUM SC 2.32 × 3.00			1
262		BRACKET ASS'Y		-10				
-10	STK	NOMENCLATURE	CODE IDENT	IDENTIFYING NO	MATERIAL/SPECIFICATION	UNIT	ZONE	FIND NO

QUANTITY REQUIRED PER DASH NO

PARTS LIST

REVISIONS

LTR	DESCRIPTION	DATE	APPROVED

UNLESS OTHERWISE SPECIFIED DIMENSIONS ARE IN INCHES — TOLERANCES ON: FRACTIONS ± 1/64 DECIMALS ± .005 ANGLES ± 0°

XB28095

APPLICATION

ENGINEERING DRAWING LAYOUT D

U.S. AIR FORCE

TITLE: BRACKET MIRROR MOUNTING SOLAR COLLECTOR MIRROR SOLAR ROCKET STUDIES

SIZE D | 07870 | XB28096

SCALE — | 57300555 | SHEET 1 of 1

REVISIONS			
LTR	DESCRIPTION	DATE	APPROVED

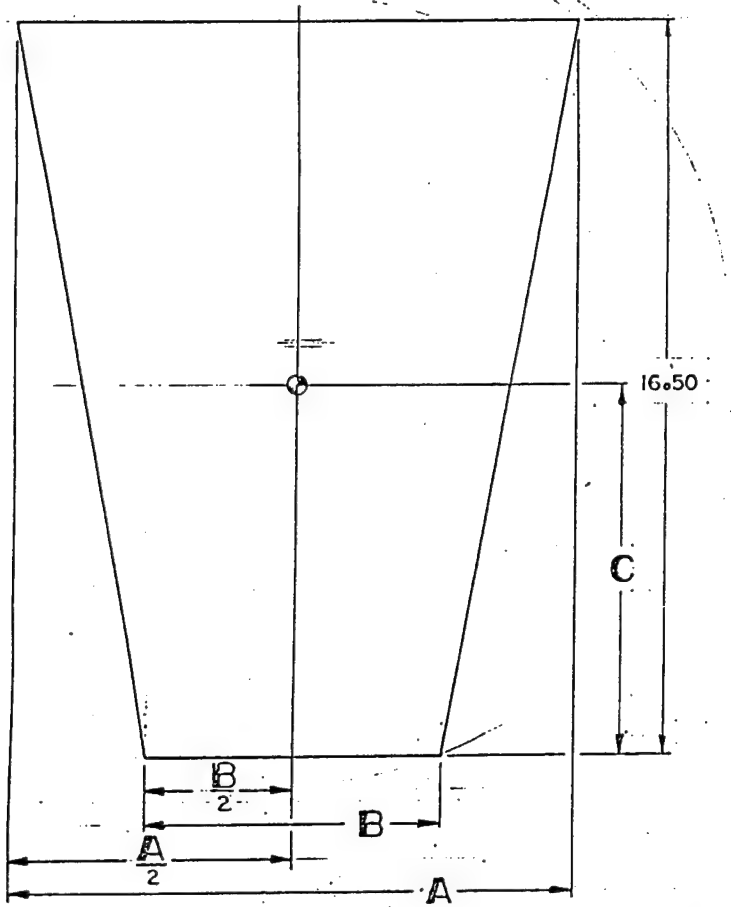

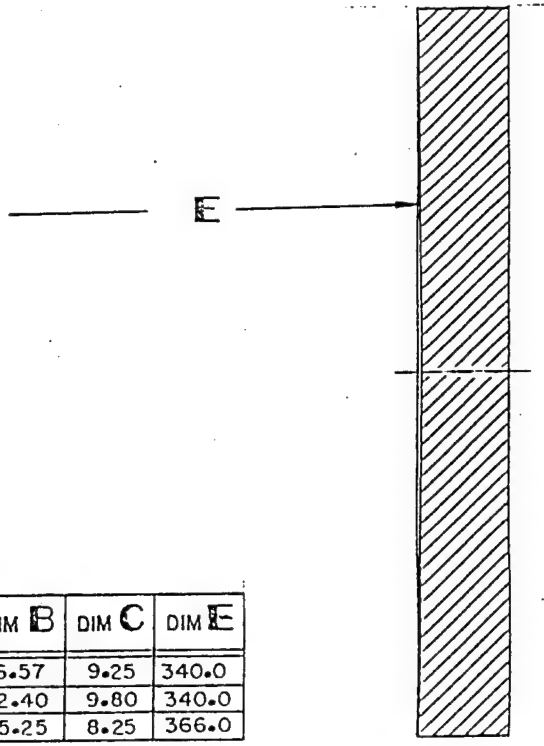

PART Nº	DIM A/2	DIM A	DIM B/2	DIM B	DIM C	DIM E
-01	6.19	12.39	3.28	6.57	9.25	340.0
-03	9.09	18.16	6.20	12.40	9.80	340.0
-05	7.63	15.25	7.63	15.25	8.25	366.0

QUANTITY REQUIRED PER DASH NO.			SYM	NOMENCLATURE	CODE IDENT	IDENTIFYING NO.	MATERIAL / SPECIFICATION	UNIT WT	ZONE	ITEM NO.
22	—	—		SUBSTRATE		-05	FOAMGLAS—PITTSBURGH/ CORNING CORP			
—	20	—				-03				
—	—	22				-01				
-05	-03	-01								

PARTS LIST

UNLESS OTHERWISE SPECIFIED DIMENSIONS ARE IN INCHES — TOLERANCES: FRACTIONS ± 1/64 DECIMALS .XX ± .020 .XXX ± .010 ANGLES ± 1°

DRAWN Borach 2/5/82
CHK J Nguyen 2/5/82
ENG
AIR FORCE AUTHENTICATION
AIR FORCE RELEASE

U.S. AIR FORCE

TITLE: SUBSTRATE CENTER
SOLAR COLLECTOR MIRROR
SOLAR-ROCKET STUDIES

SIZE	AIR FORCE IDENT NO.	DRAWING NO.	DIC
C	07870	X828105	

SCALE — | 573005SS | SHEET 1 of 1

CURRENT USE ASSEMBLY	NEXT ASSEMBLY	USED ON
	X828099	

APPLICATION

DRAWING LAYOUT C

AF Form 1654

X_828105_B

REVISIONS			
LTR	DESCRIPTION	DATE	APPROVED

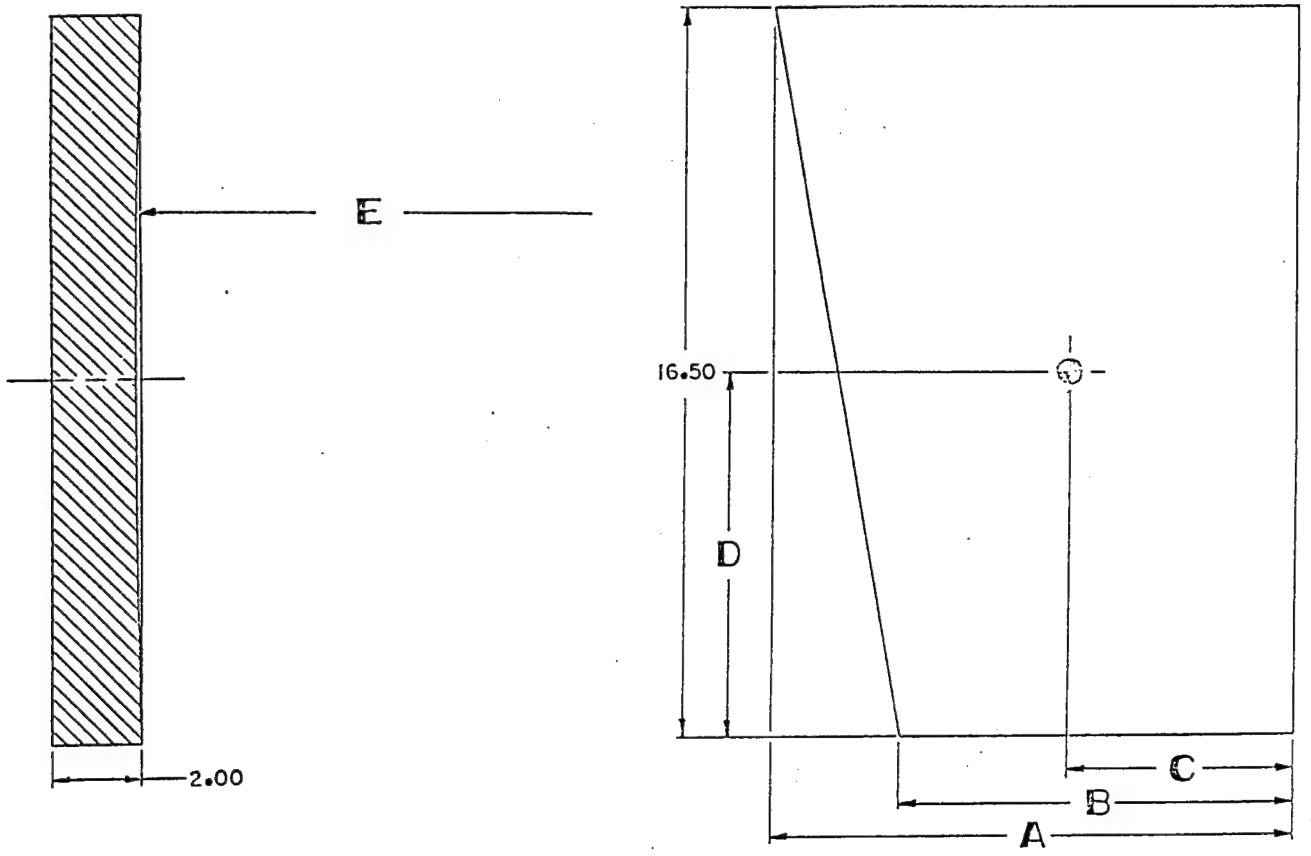

12	—	—	—	—	—	SUBSTRATE		—13	FOAMGLAS—PITTSBURGH/CORNING CORP
—	8	—	—	—	—			—11	
—	—	20	—	—	—			—07	
—	—	—	20	—	—			—05	
—	—	—	—	20	—			—03	
—	—	—	—	—	20			—01	
—13	—11	—07	—05	—03	—01	SYM	NOMENCLATURE	CODE IDENT / IDENTIFYING NO.	MATERIAL / SPECIFICATION

QUANTITY REQUIRED PER DASH NO.

PARTS LIST

PART Nº	DIM A	DIM B	DIM C	DIM D	DIM E
-01	11.76	8.90	5.20	8.63	340
-03	14.60	11.77	6.62	8.55	340
-05	17.40	14.61	8.02	8.90	340
-07	20.16	17.40	9.41	8.45	365
-11	17.92	15.25	8.31	8.47	366
-13	15.25	12.54	6.97	8.52	366

CURRENT CODE IDENT NO. | X828098 | NEXT ASSEMBLY | USED ON

APPLICATION

UNLESS OTHERWISE SPECIFIED DIMENSIONS ARE IN INCHES — TOLERANCES ON: FRACTIONS ± ; DECIMALS .XX ± .020 .XXX ± .010 ; ANGLES ± ; FINISH

Rocock 21/Sept/82
J. Naujokas 23 Sep 82

AIR FORCE AUTHENTICATION

AIR FORCE RELEASE

U.S. AIR FORCE

TITLE: SUBSTRATE R/H
SOLAR COLLECTOR MIRROR
SOLAR ROCKET STUDIES

SIZE	AIR FORCE CODE IDENT NO.	DRAWING NO.
C	07870	X828104

SCALE — 573005SS SHEET 1 OF 1

ENGINEERING DRAWING LAYOUT C

AF FORM 1654

X828104

NOTES

1 PREGRIND USING CONTOUR SANDING BLOCK FURNISHED BY A.F.R.P.L.

2 SAND THIS AREA, BOTH SIDES, USING 81 GRIT SANDPAPER.

REVISIONS

LTR	DESCRIPTION	DATE	APPROVED

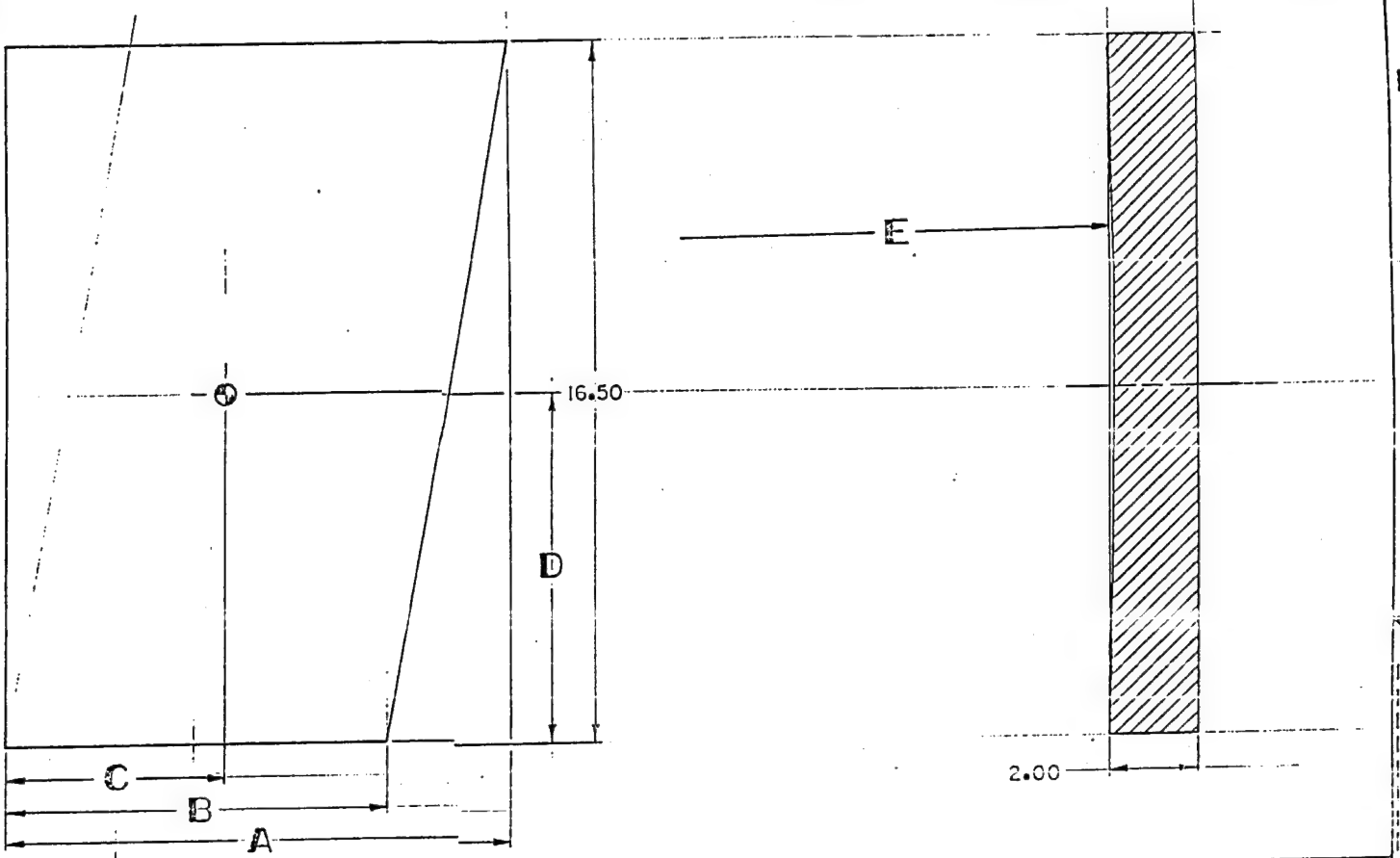

PART Nº	DIM A	DIM B	DIM C	DIM D	DIM E
-01	11.76	8.90	5.20	8.63	340
-03	14.60	11.77	6.62	8.55	340
-05	17.40	14.61	8.02	8.90	340
-07	20.16	17.40	9.41	8.45	366
-11	17.92	15.25	8.31	8.47	366
-13	15.25	12.54	6.97	8.52	366

-13	-11	-07	-05	-03	-01	SYM	NOMENCLATURE	CAGE IDENT	IDENTIFYING NO.	MATERIAL / SPECIFICATION
12	—	—	—	—	—		SUBSTRATE		-13	FOAMGLAS— PITTSBURGH/CORNING CORP
—	8	—	—	—	—				-11	
—	—	20	—	—	—				-07	
—	—	—	20	—	—				-05	
—	—	—	—	20	—				-03	
—	—	—	—	—	20				-01	

QUANTITY REQUIRED PER DASH NO.

PARTS LIST

CURRENT CAGE IDENT NO. X828097 — NEXT HIGHER ASSY — USED ON APPLICATION

UNLESS OTHERWISE SPECIFIED DIMENSIONS ARE IN INCHES — TOLERANCES PER: FRACTIONS ± — DECIMALS XX ± .030, XXX ± .010 — ANGLES ±

DRAWN R. Pocock 21 Sept 62

ENG L. Maryska 23 Sep 62

AIR FORCE AUTHENTICATION

AIR FORCE APPROVAL

U.S. AIR FORCE

TITLE: SUBSTRATE L/H
SOLAR COLLECTOR INSTALLATION
SOLAR ROCKET STUDIES

SIZE C | AIR FORCE CAGE IDENT NO. 07870 | DRAWING NO. X828103

SCALE — | 573005 SS | SHEET 1 OF 1

X828103

BRUNING AD 107 47517

AF 1654

REVISIONS			
LTR	DESCRIPTION	DATE	APPROVED
A	-03 DIM. "A" 17.91 - DIM. "B" 12.15	13 JAN 83	[illegible]

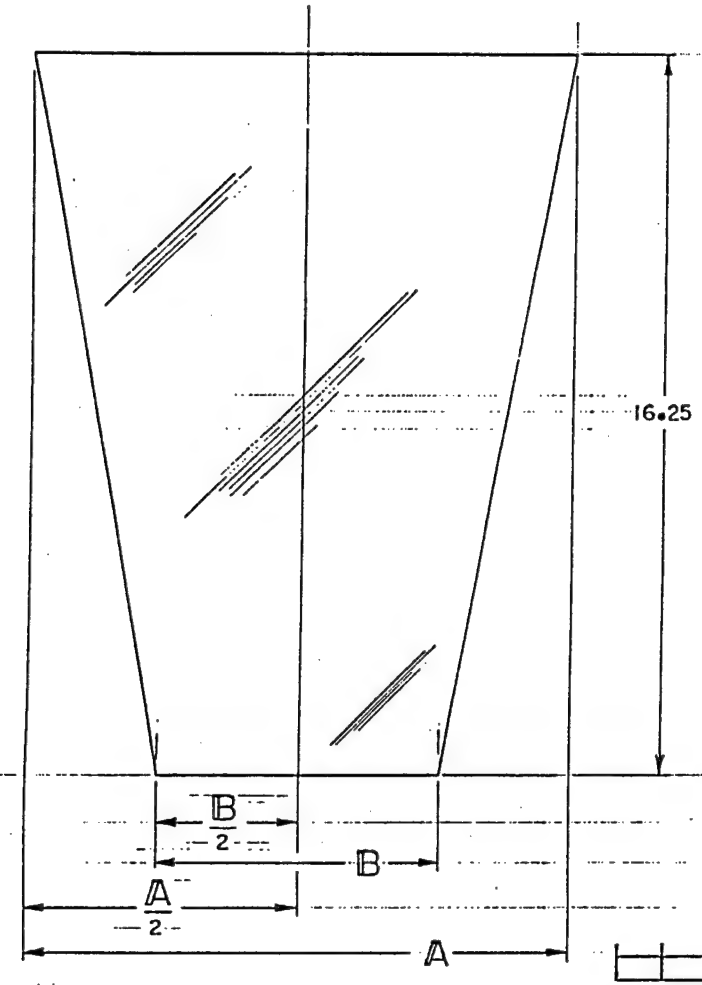

PART Nº	DIM A/2	DIM A	DIM B/2	DIM B
-01	6.06	12.13	3.16	6.32
-03	9.02	18.04	6.15	12.29
-05	7.50	15.00	7.50	15.00

(A)

-05	-03	-01	SYM	NOMENCLATURE	CODE IDENT	IDENTIFYING NO.	MATERIAL / SPECIFICATION
20	—	—		MIRROR		-05	GLASS SUPPLIER: CORNING
—	20	—				-03	GLASS TYPE: 0317 FUSION GLASS (1.5MM)
—	—	20				-01	COATING SPECS: 80mg/ft² SILVER, 15mg/ft² COPPER, 8mg/ft² PROTECT. BKG.

QUANTITY REQUIRED PER DASH NO.

PARTS LIST

UNLESS OTHERWISE SPECIFIED DIMENSIONS ARE IN INCHES — TOLERANCES ON: FRACTIONS ± [illegible] DECIMALS .XX ± .020 .XXX ± .010 ANGLES ± [illegible]

X828099

APPLICATION

U.S. AIR FORCE

TITLE: MIRROR, CENTER
SOLAR COLLECTOR MIRROR
SOLAR-ROCKET STUDIES

SIZE: C | AIR FORCE CODE IDENT NO.: 07870 | DRAWING NO.: X828102 [illegible]

SCALE: 573005 SS | SHEET 1 OF 1

X828102 A

BRUNING AD 107 47617

AF [illegible] 1654

REVISIONS				
LTR	DESCRIPTION		DATE	APPROVED
	-01 DIM. A W/ 11.51 DIM. B W/ 8.65			
	-03	14.35	11.52	
A	-05	17.15	14.36	13JAN83
	-07	19.91	15.15	
	-11	17.67	15.00	
	-13 DIM. A W/ 15.00 DIM. B W/ 12.29			

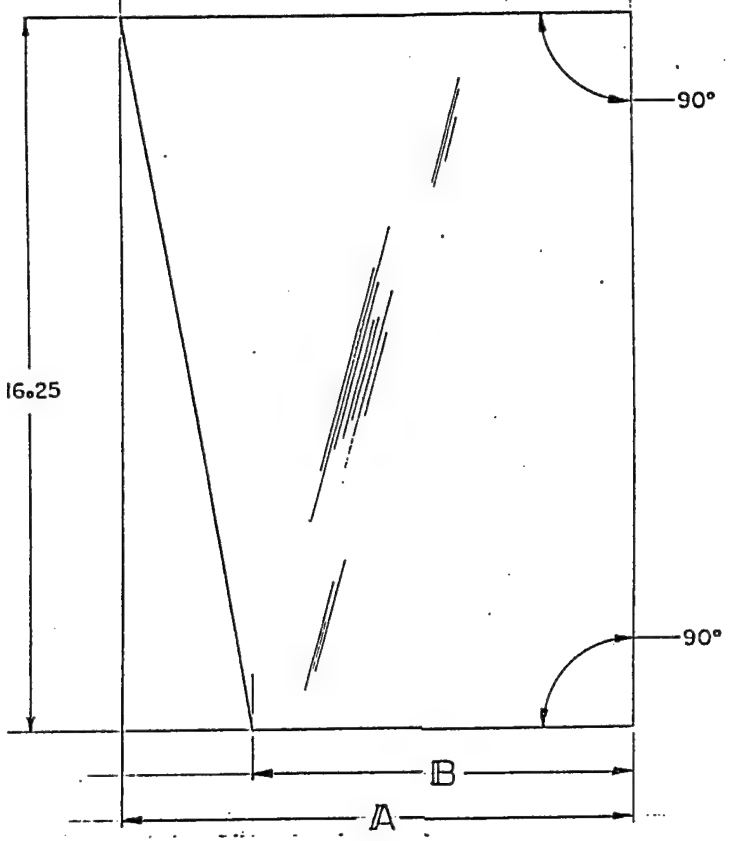

PART N°	DIM A	DIM B
-01	11.53	8.67
-03	14.44	11.62
-05	17.32	14.53
-07	20.15	17.42
-11	18.17	15.52
-13	15.43	12.74

(A)

QUANTITY REQUIRED PER DASH NO.						SYM	NOMENCLATURE	CODE IDENT	IDENTIFYING NO.	MATERIAL / SPECIFICATION
12	—	—	—	—	—		MIRROR		-13	GLASS SUPPLIER: CORNING
—	8	—	—	—	—				-11	GLASS TYPE : 0317 FUSION GLASS (1.5mm)
—	—	20	—	—	—				-07	COATING SPECS : 80mg/ft² SILVER
—	—	—	20	—	—			11	-05	15mg/ft² COPPER
—	—	—	—	20	—				-03	8mg/ft² PROTECT. BKG
—	—	—	—	—	20				-01	
-13	-11	-07	-05	-03	-01					

PARTS LIST

NEXT ASSY	USED ON APPLICATION
	X828098

UNLESS OTHERWISE SPECIFIED DIMENSIONS ARE IN INCHES — TOLERANCES ON: FRACTIONS ± 1/64, .XX ± .020, .XXX ± .010, ANGLES ± 1°

DRAWN 21SEPT82
CHK Yamakawa 23 Sep 82
AIR FORCE AUTHENTICATION
AIR FORCE RELEASE

U.S. AIR FORCE

L/H

TITLE: MIRROR R/H
SOLAR COLLECTOR MIRROR
SOLAR ROCKET STUDIES

SIZE	AIR FORCE CODE IDENT NO.	DRAWING NO.
C	07870	X828101

SCALE 573005 SS SHEET 1 OF 1

X828101 [A]

BRUNING AD 107 47617

AF FORM 1654

REVISIONS				
LTR	DESCRIPTION		DATE	APPROVED
A	-01 DIM.A W/ 11.51 DIM.B W/ 8.65		13JAN83	JA
	-03 14.35	11.52		
	-05 17.15	14.36		
	-07 19.91	17.15		
	-11 17.67	15.00		
	-13 DIM.A W/ 15.00 DIM.B W/ 12.29			

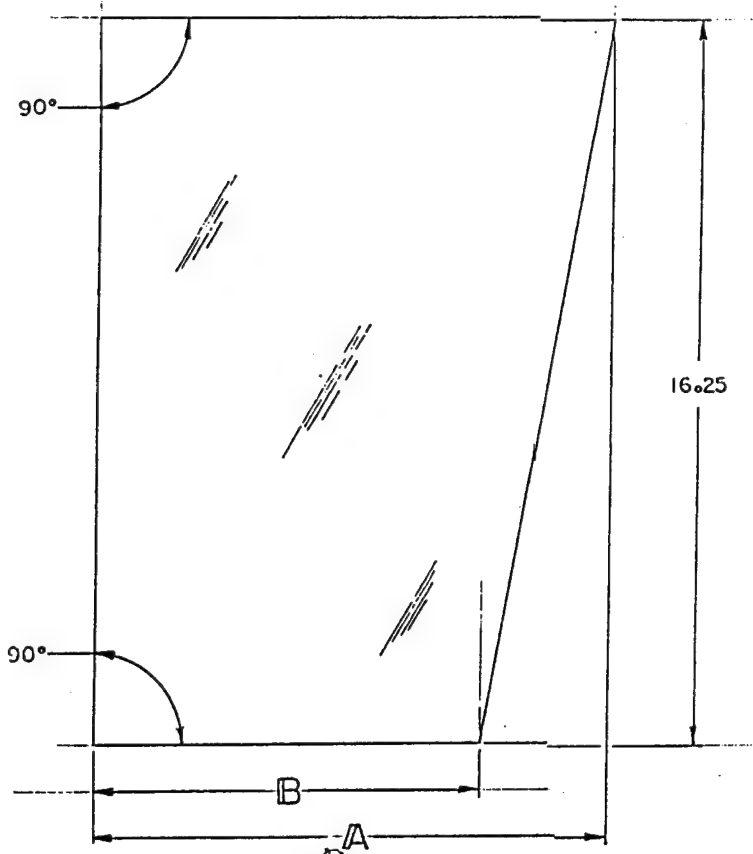

PART Nº	DIM A	DIM B
-01	11.53	18.67
-03	14.44	11.62
-05	17.32	14.53
-07	20.15	17.42
-11	18.17	15.52
-13	15.43	12.74

A

QUANTITY REQUIRED PER DASH NO.						STN	NOMENCLATURE	CODE IDENT	IDENTIFYING NO.	MATERIAL / SPECIFICATION
12	—	—	—	—	—		MIRROR		-13	GLASS SUPPLIER : CORNING.
—	8	—	—	—	—				-11	GLASS TYPE : 0317 FUSION GLASS (1.5MM)
—	—	20	—	—	—				-07	COATING SPECS : 80mg/ft² SILVER
—	—	—	20	—	—				-05	15mg/ft² COPPER
—	—	—	—	20	—				-03	8mg/ft PROTECT. BKG
—	—	—	—	—	20				-01	
-13	-11	-07	-05	-03	-01					

PARTS LIST

X828097

UNLESS OTHERWISE SPECIFIED
DIMENSIONS ARE IN INCHES — TOLERANCES ON:
FRACTIONS ± 1/64 DECIMALS .XX ± .010 .XXX ± .010 ANGLES ± 1/2°

Rocock 21 Sept 82
Naujokas 23 Sep 82

AIR FORCE AUTHENTICATION

AIR FORCE RELEASE

U.S. AIR FORCE

TITLE
MIRROR L/H
SOLAR-COLLECTOR MIRROR
SOLAR ROCKET STUDIES

SIZE	AIR FORCE CODE IDENT NO.	DRAWING NO.
C	07870	X828100

X828100 A

NOTES:

1. MIX 2 PARTS OF EPOXY RESIN (8) TO 1 PART OF EPOXY RESIN (9) AND APPLY TO BACK OF MIRROR (1) (2) OR (3) COVERING COMPLEATLY TO A THICKNESS OF .003-.005 PRIOR TO ASSEMBLY WITH SUBSTRATE (4) (5) OR (6).
2. BOND BRACKET (7) TO SUBSTRATE (4) (5) OR (6) WITH TAB ADHESIVES.
3. SEAL ALL EDGES OF MIRROR (1) (2) OR (3) WITH EDGE SEAL (11)
4. SEAL ALL SIDES OF SUBSTRATE 4 5 OR 6 WITH FOAM GLASS SEAL 12
5. APPLY PAINT 13 ALL EXPOSED SURFACE OF SUBSTRATE (4) (5) OR (6)

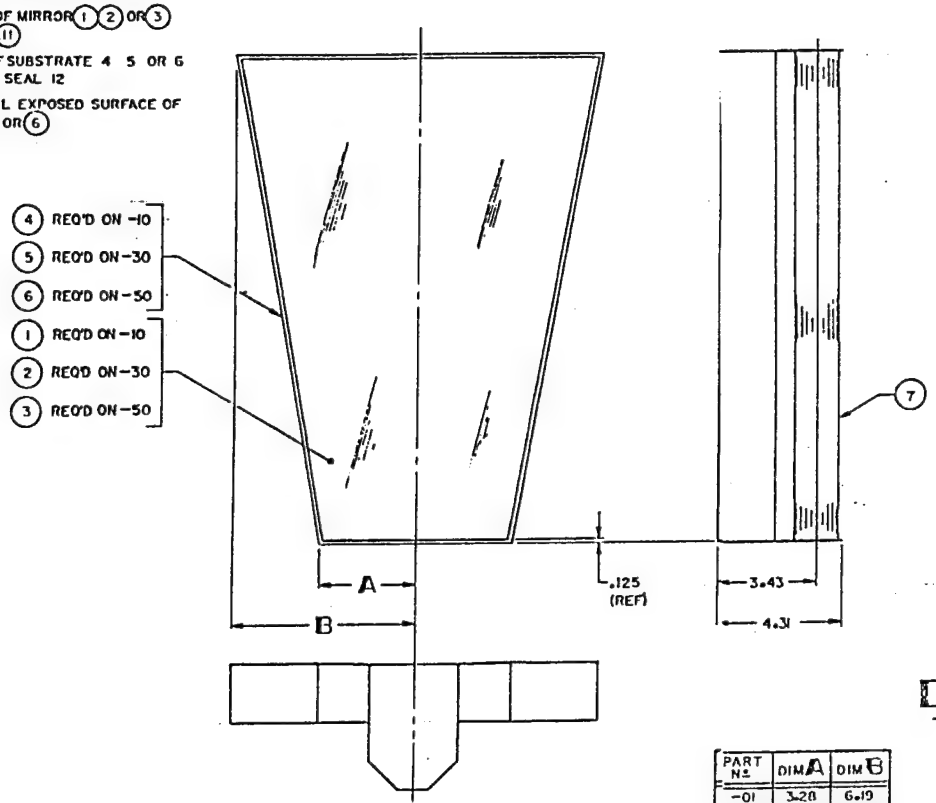

PART No.	DIM A	DIM B
-01	3.28	6.19
-03	6.20	9.09
-05	7.63	7.63

A/R	A/R	A/R		PAINT		KEMGLAZE-A276	HUGHSON CHEMICALS POLYURETHANE			13
A/R	A/R	A/R		FOAMGLAS SEAL		PC-404	PITTSBURG CORNING ACRYLIC LATEX			12
A/R	A/R	A/R		EDGE SEAL		VULKEM 116	MAMECO CORP ONE PART URETHANE			11
A/R	A/R	A/R		TAB ADHESIVE		PC88	PITTSBURGH CORNING TWO PART SILICONE			10
A/R	A/R	A/R		EPOXY RESIN		9427	FURANE PLASTICS			9
A/R	A/R	A/R		EPOXY RESIN		DER332	DOW CORP			8
22	20	20		BRACKET		X828106-10				7
22	—	—		SUBSTRATE		X828105-05				6
—	20	—				X828105-03				5
—	—	20				X828105-01				4
22	—	—		MIRROR		X828102-05				3
—	20	—				X828102-03				2
—	—	20				X828102-01				1
22	—	—		MIRROR, ASS'Y		-50				
—	20	—				-30				
—	—	20				-10				
-50	-30	-10	STK	NOMENCLATURE	CODE IDENT	IDENTIFYING NO	MATERIAL/SPECIFICATION	UNIT WT	ZONE	ENG NO

PARTS LIST

QUANTITY REQUIRED PER DASH NO

UNLESS OTHERWISE SPECIFIED DIMENSIONS ARE IN INCHES - TOLERANCES ON FRACTIONS DECIMALS ANGLES

X828095

APPLICATION

ENGINEERING DRAWING LAYOUT B

U.S. AIR FORCE

SOLAR COLLECTOR MIRROR ASSEMBLY
SOLAR ROCKET STUDIES

D 07870 X828099

57300555

X828099

NOTES:

1. MIX 2 PARTS EPOXY RESIN (14) TO 1 PART OF EPOXY RESIN (15) AND APPLY TO BACK OF MIRROR (1) THRU (6) COVERING COMPLEATLY TO A THICKNESS OF .003 – .005 PRIOR TO ASSEMBLY WITH SUBSTRATE (7) THRU (12)
2. BOND BRACKET (13) TO SUBSTRATE (7) THRU (12) WITH TAB ADHESIVES
3. SEAL ALL EDGES OF MIRROR (1) THRU (6) WITH EDGE SEAL (11)
4. SEAL ALL SIDES OF SUBSTRATE (7) THRU (12) WITH FOAM GLASS SEAL (12)
5. APPLY PAINT 19 ALL EXPOSED SURFACES OF SUBSTRATE (7) THRU (12)

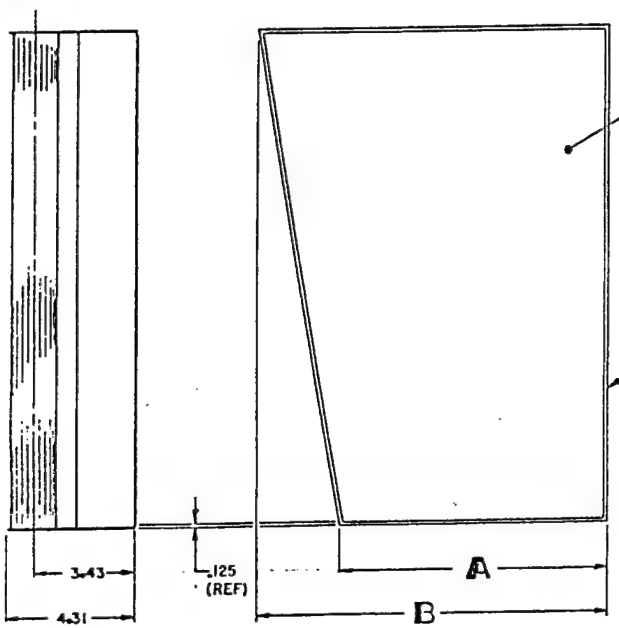

(1) REQ'D ON -10
(2) REQ'D ON -30
(3) REQ'D ON -50
(4) REQ'D ON -70
(5) REQ'D ON -110
(6) REQ'D ON -130

(7) REQ'D ON -10
(8) REQ'D ON -30
(9) REQ'D ON -50
(10) REQ'D ON -70
(11) REQ'D ON -110
(12) REQ'D ON -130

PART No	DIM A	DIM B
-10	8.90	11.76
-30	11.77	14.60
-50	14.61	17.43
-70	17.40	20.16
-110	15.25	17.92
-130	12.54	15.25

-130	-110	-70	-50	-30	-10	SYM	NOMENCLATURE	CODE IDENT	IDENTIFYING NO.	MATERIAL / SPECIFICATION	UNIT NO.	ZONE	FIND NO.
A/R	A/R	A/R	A/R	A/R	A/R		PAINT		KEMGLAZE-A276	HUGHSON CHEMICALS POLYURETHANE			19
A/R	A/R	A/R	A/R	A/R	A/R		FOAMGLAS SEAL		PC-404	PITTSBURGH CORNING ACRYLIC LATEX			18
A/R	A/R	A/R	A/R	A/R	A/R		EDGE SEAL		VULKEM 116	MAMECO CORP ONE PART URETHANE			17
A/R	A/R	A/R	A/R	A/R	A/R		TAB ADHESIVE		PC 88	PITTSBURGH CORNING TWO PART SILICONE			16
A/R	A/R	A/R	A/R	A/R	A/R		EPOXY RESIN		9427	FURANE PLASTICS			15
A/R	A/R	A/R	A/R	A/R	A/R		EPOXY RESIN		DER332				14
12	8	20	20	20	20		BRACKET		X828106-10				13
12	—	—	—	—	—		SUBSTRATE		X828104-13				12
—	8	—	—	—	—				-11				11
—	—	20	—	—	—				-07				10
—	—	—	20	—	—				-05				9
—	—	—	—	20	—				-03				8
—	—	—	—	—	20				X828104-01				7
12	—	—	—	—	—		MIRROR		X828101-13				6
—	8	—	—	—	—				-11				5
—	—	20	—	—	—				-07				4
—	—	—	20	—	—				-05				3
—	—	—	—	20	—				-03				2
—	—	—	—	—	20				X828101-01				1
12	—	—	—	—	—		MIRROR, ASS'Y		-130				
—	8	—	—	—	—				-110				
—	—	20	—	—	—				-70				
—	—	—	20	—	—				-50				
—	—	—	—	20	—				-30				
—	—	—	—	—	20				-10				

QUANTITY REQUIRED PER DASH NO.

PARTS LIST

X828158

APPLICATION

ENGINEERING DRAWING LAYOUT B

PRESS RELEASE SPECIFICATION

U.S. AIR FORCE

SOLAR COLLECTOR MIRROR R/H ASSEMBLY
SOLAR ROCKET STUDIES

D 07870 X828098

573005SS

SHEET 1 OF 1

8 | 7 | 6 | 5 | 4 | 3 | 2 | 1

REVISIONS

LTR	DESCRIPTION	DATE	APPROVED

NOTES:

- MIX 2 PARTS OF EPOXY RESIN (14) TO 1 PART OF EPOXY RESIN (15) AND APPLY TO BACK OF MIRROR (1) THRU (6) COVERING COMPLEATLY TO A THICKNESS OF .003-.005 PRIOR TO ASSEMBLY WITH SUBSTRATE (7) THRU (12)
- BOND BRACKET (13) TO SUBSTRATE (7) THRU (12) WITH TAB ADHESIVES.
- SEAL ALL EDGES OF MIRROR (1) THRU (6) WITH EDGE SEAL (11).
- SEAL ALL SIDES OF SUBSTRATE (7) THRU (12) WITH FOAM GLASS SEAL (12)
- APPLY PAINT (19) ALL EXPOSED SURFACES OF SUBSTRATE (7) THRU (12)

▷ NUMBER DO NOT INDICATE SPARES SEE DRAWING X828095 FOR AMOUNT OF SPARES REQ'D.

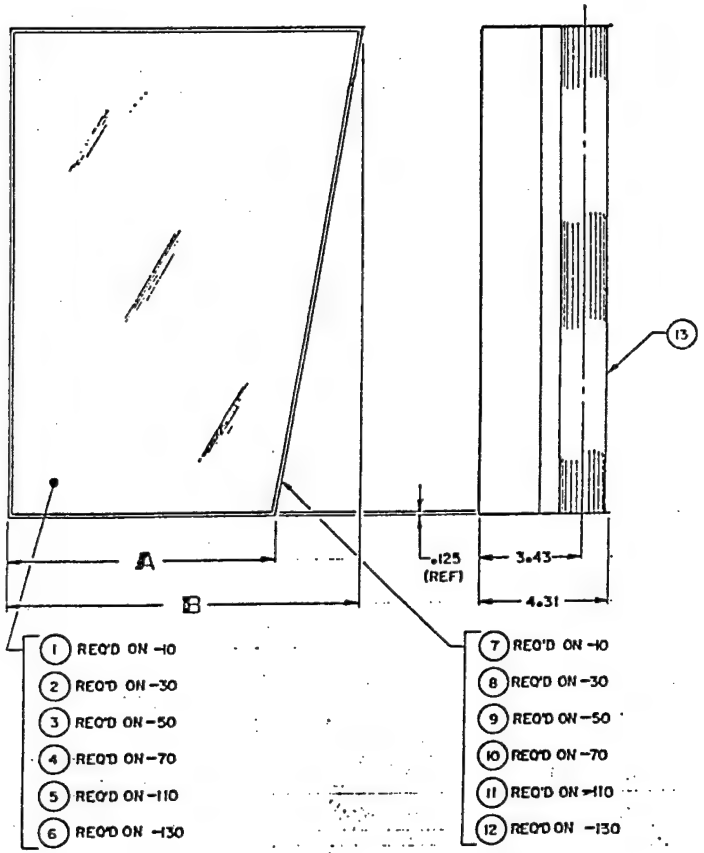

D/L

-130	-110	-70	-50	-30	-10	STR	NOMENCLATURE	CODE IDENT	IDENTIFYING NO	MATERIAL/SPECIFICATION	UNIT OF ISSUE	ITEM NO.
A/R	A/R	A/R	A/R	A/R	A/R		PAINT		KEMGLAZE-A276	HUGHSON CHEMICALS		19
A/R	A/R	A/R	A/R	A/R	A/R		FOAMGLAS SEAL		PC-404	PITTSBURGH CORNING		18
A/R	A/R	A/R	A/R	A/R	A/R		EDGE SEAL		VULKEM 116	MAMECO CORP		17
A/R	A/R	A/R	A/R	A/R	A/R		TAB ADHESIVE		PC88	PITTSBURGH CORNING		16
A/R	A/R	A/R	A/R	A/R	A/R		EPOXY RESIN		9427	FURANE PLASTICS		15
A/R	A/R	A/R	A/R	A/R	A/R		EPOXY RESIN		DER 332	DOW CORP		14
10	8	20	20	20	20		BRACKET		X828096-10			13
10	—	—	—	—	—		SUBSTRATE		X828104-13			12
—	8	—	—	—	—				-11			11
—	—	20	—	—	—				-07			10
—	—	—	20	—	—				-05			9
—	—	—	—	20	—				-03			8
—	—	—	—	—	20				X828104-01			7
10	—	—	—	—	—		MIRROR		X828100-13			6
—	8	—	—	—	—				-11			5
—	—	20	—	—	—				-07			4
—	—	—	20	—	—				-05			3
—	—	—	—	20	—				-03			2
—	—	—	—	—	20				X828100-01			1
10	—	—	—	—	—		MIRROR, ASS'Y		-130			
—	8	—	—	—	—				-110			
—	—	20	—	—	—				-70			
—	—	—	20	—	—				-50			
—	—	—	—	20	—				-30			
—	—	—	—	—	20				-10			

QUANTITY REQUIRED PER BASE OF | 4 | PARTS LIST

U.S. AIR FORCE

UNLESS OTHERWISE SPECIFIED DIMENSIONS ARE IN INCHES — TOLERANCES ON: FRACTIONS ±1/32, DECIMALS .XX ±.010, .XXX ±.005, ANGLES ±1°

Sharpe 27 DEC 62
Allyn

TITLE: SOLAR COLLECTOR MIRROR L/H ASSEMBLY - SOLAR ROCKET STUDIES

SIZE: D | AIR FORCE BASE SYMBOL NO.: 07870 | DRAWING NO.: X828097

SCALE: — | 573005 S5 | SHEET

CURRENT EDP INPUT NO. | X828095 | NEXT HIGHER APPLICATION

ENGINEERING DRAWING LAYOUT C

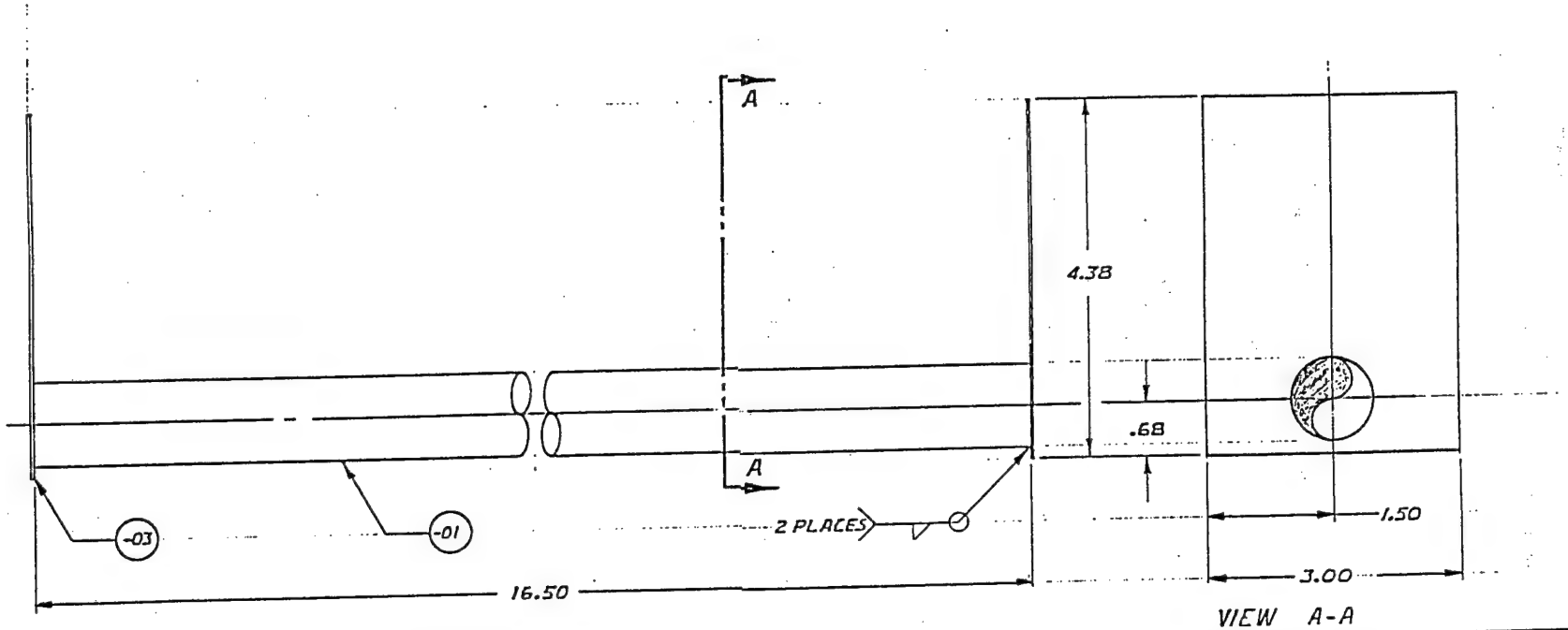

-10 BRACKET A55'Y

LTR	DESCRIPTION	DATE	APPROVED

	STN	NOMENCLATURE	CODE IDENT	IDENTIFYING NO.	MATERIAL / SPECIFICATION	UNIT WT	ZONE	FIND NO.
2		END PLATE		-03	QQ-S-634 1020 STL PLATE 4.38 × 3.00 × .03			
1		PIPE		-01	$\frac{3}{4}$ SCH 40 × 16.50 STL PIPE			
262		MOUNT		-10				

PARTS LIST

QUANTITY REQUIRED PER DASH NO.

CURRENT CODE IDENT NO.	NEXT ASSEMBLY	USED ON
	X828099	
	X828098	
	X828097	

APPLICATION

UNLESS OTHERWISE SPECIFIED DIMENSIONS ARE IN INCHES — TOLERANCES ON: FRACTIONS ± ~ DECIMALS .XX ± .020 .XXX ± .010 ANGLES ± ~

DR. R. R. Rocock
CHK. J. Nayakos
ENG.

AIR FORCE AUTHENTICATION

AIR FORCE RELEASE

U.S. AIR FORCE

TITLE BRACKET MIRROR
SOLAR COLLECTOR MIRROR
SOLAR ROCKET STUDIES

SIZE C | AIR FORCE CODE IDENT NO. 07870 | DRAWING NO. X828106 OK

SCALE FULL | 573005 SS | SHEET 1 OF 1

ENGINEERING DRAWING LAYOUT C

X828106

AF FORM 1654

1. POSITION SOLAR COLLECTOR PEDESTAL ON PAD AND LEVEL BY GROUTING.
2. INSTALL SOLAR COLLECTOR MOUNT ASS'Y ON PEDESTAL.
3. INSTALL SOLAR COLLECTOR AND ALIGN WITH HELIOSTAT. TIGHTEN BOLTS AND WELD AS INDICATED.
4. ASSEMBLE BRACE

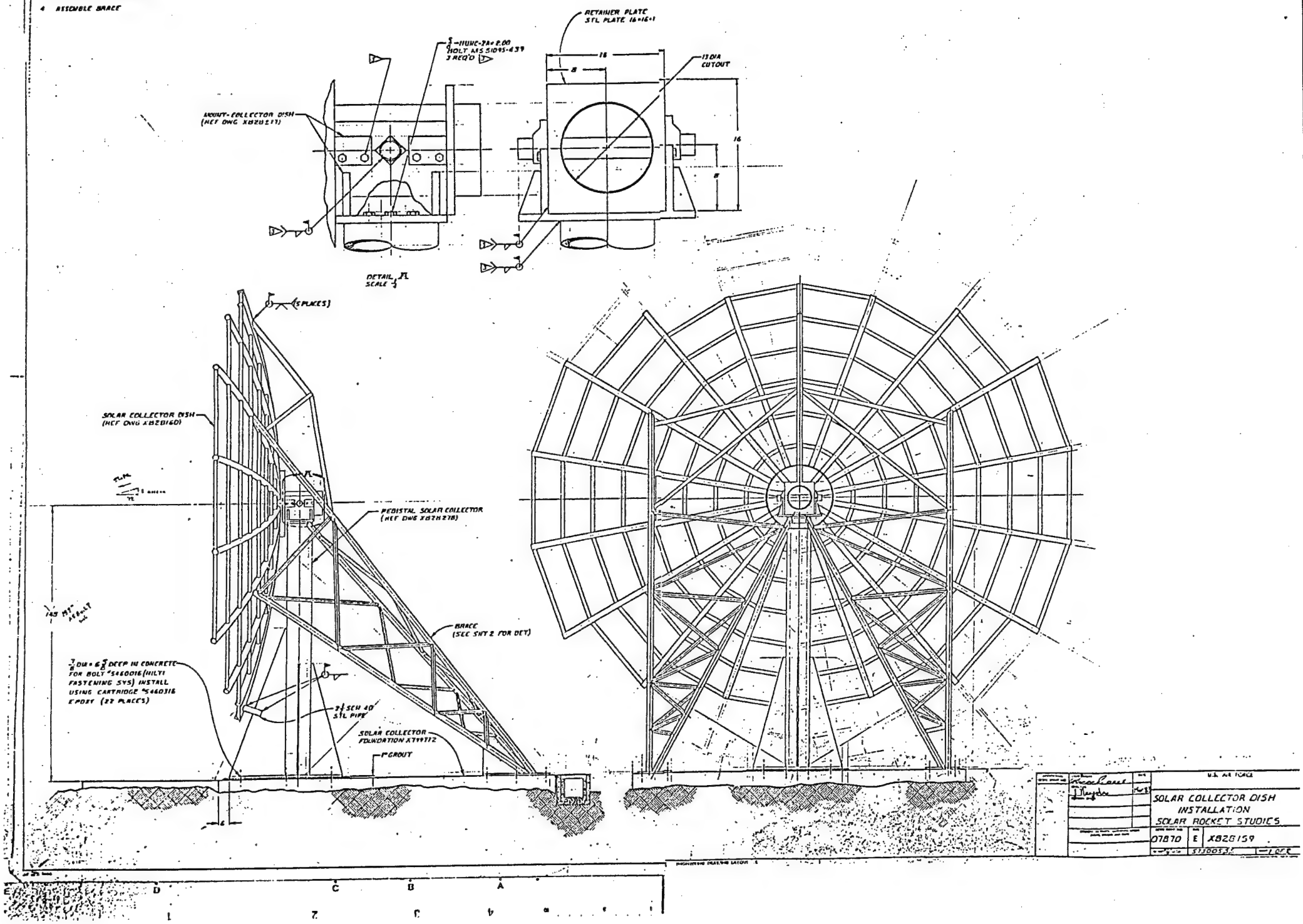

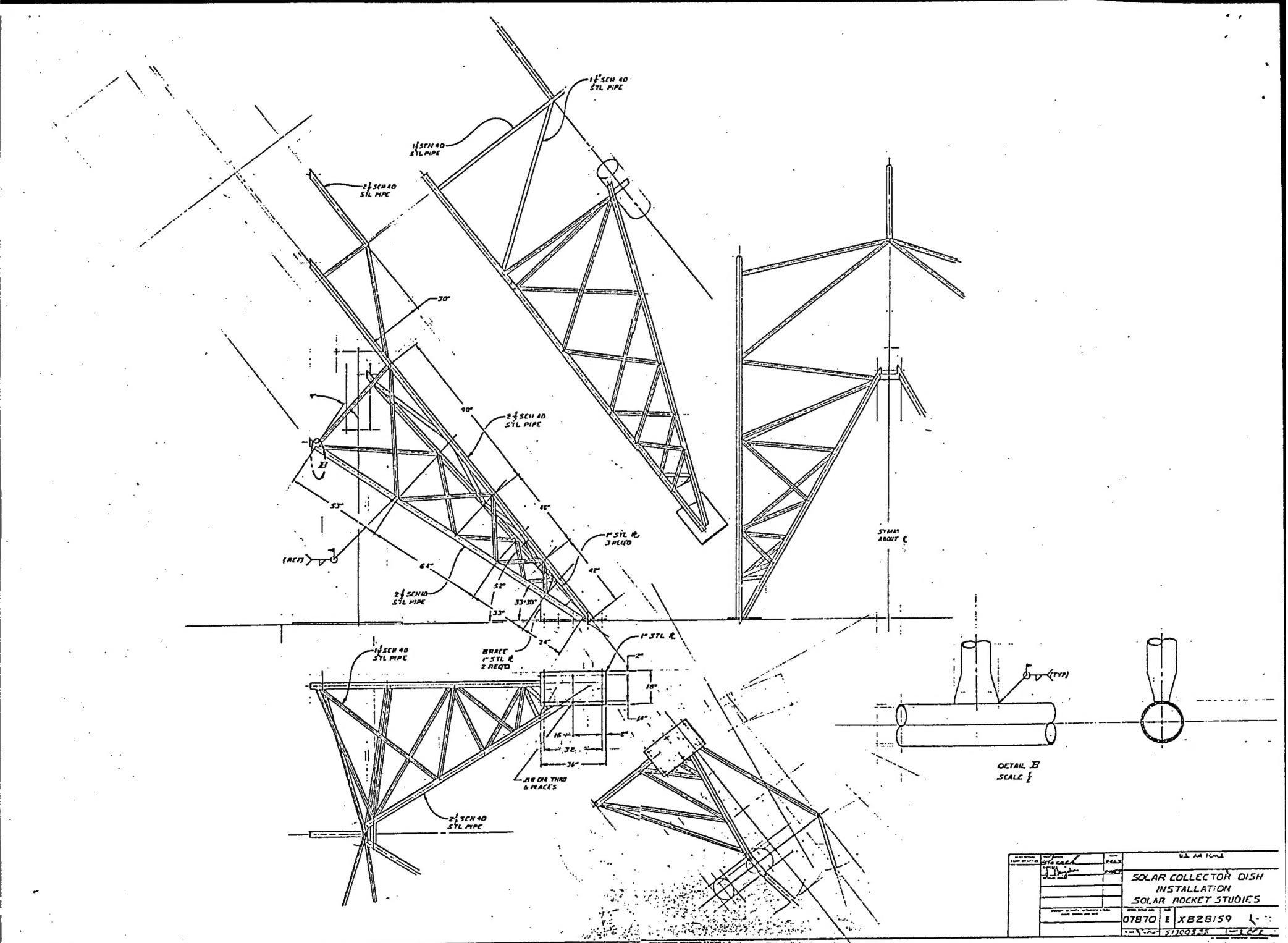
1½ SCH 40 STL PIPE
1½ SCH 40 STL PIPE
2½ SCH 40 STL PIPE
30°
90°
2½ SCH 40 STL PIPE
B
53"
46"
(REF)
64"
1" STL R. 3 REQ'D
2½ SCH 40 STL PIPE
52"
33°30'
33"
74"
SYMM ABOUT ℄
1½ SCH 40 STL PIPE
BRACE 1" STL R. 2 REQ'D
1" STL R.
2"
18"
14"
16"
2"
32"
36"
4Ø DIA THRU 6 PLACES
2½ SCH 40 STL PIPE
(TYP)
DETAIL B
SCALE ½
U.S. AIR FORCE
SOLAR COLLECTOR DISH INSTALLATION
SOLAR ROCKET STUDIES
07870
E
XB28159
D
C
B
A

NOTES:

1. CENTER LINE OF PIVOT TUBE TO BE ON HORIZONTAL CENTER LINE OF COLLECTOR.

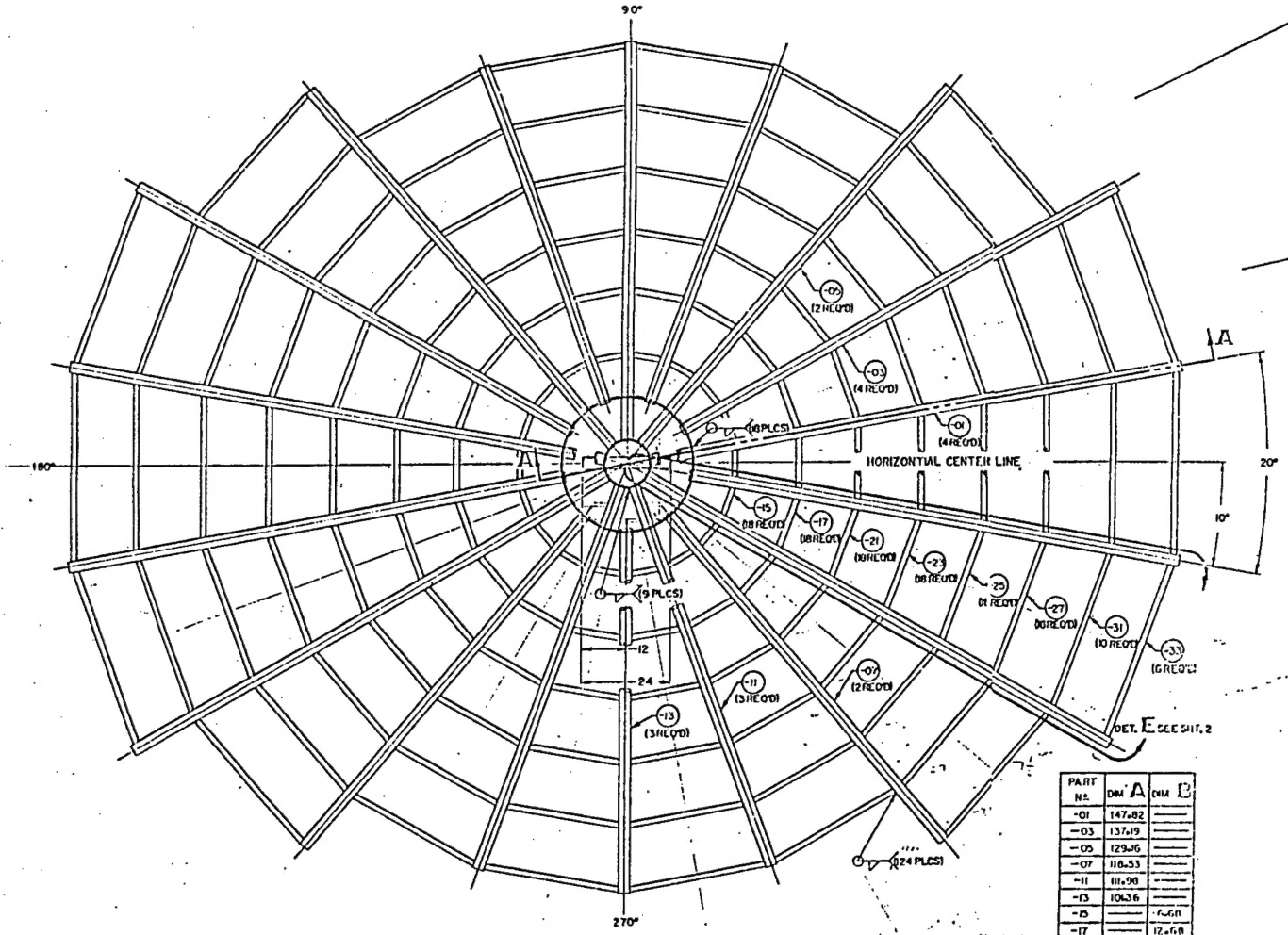

MIRROR MOUNTING FRAME ASS'Y
SCALE 1" = 1'-0"

PART NO.	DIM A	DIM B
-01	147.82	———
-03	137.19	———
-05	129.16	———
-07	118.53	———
-11	111.98	———
-13	101.36	———
-15	———	7.68
-17	———	12.68
-21	———	18.68
-23	———	24.68
-25	———	30.33
-27	———	36.32
-31	———	41.96
-33	———	47.61

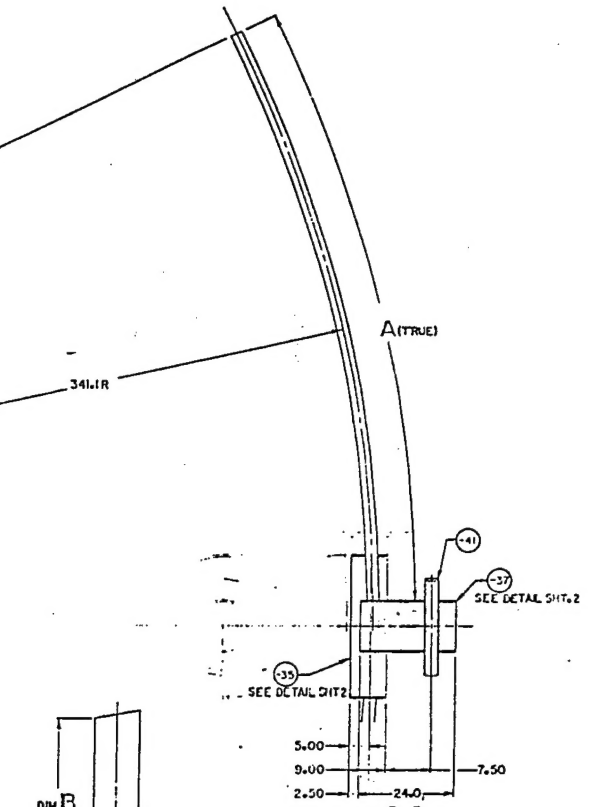

1	PIVOT TUBE		-41	COMM'L STD STL PIPE	2½ SCH40 X 24.00
1	RING		-37		12 SCH40 X 24.00
1			-35		36 SCH40 X 5.00
6	MOUNT		-33	COMM'L STD 1½ SCH40 STL PIPE	X 47.61 LONG
10			-31		X 41.96
16			-27		X 36.32
16			-25		X 30.33
16			-23		X 24.68
16			-21		X 18.68
16			-17		X 12.68
16	MOUNT		-15		X 6.68
3	ARM		-13	COMM'L STD 2½ SCH40 STL PIPE	X 101.36
3			-11		X 111.98
2			-07		X 118.53
2			-05		X 129.16
4			-03		X 137.19
4	ARM		-01		X 147.82 LONG

PARTS LIST

U.S. AIR FORCE

DISH-ASSEMBLY
SOLAR COLLECTOR
SOLAR ROCKET STUDIES

07870 | E | X828160

1"=1'-0" 57300535 1 OF 2

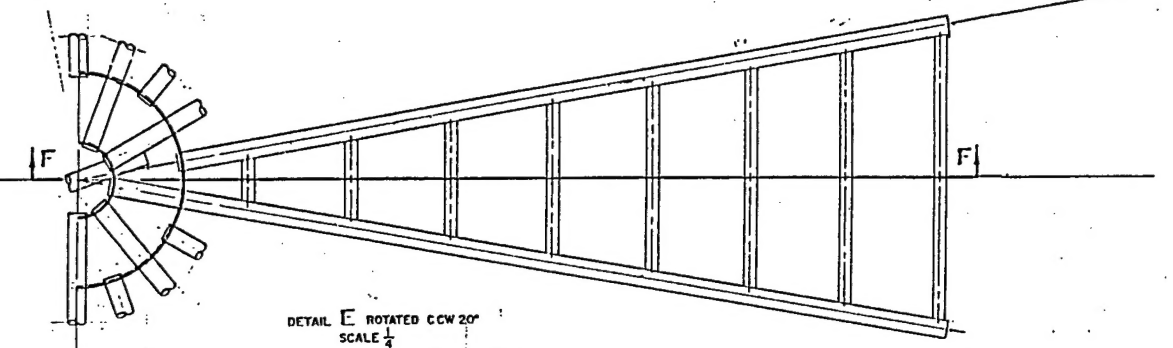

DETAIL E ROTATED CCW 20°
SCALE 1/4

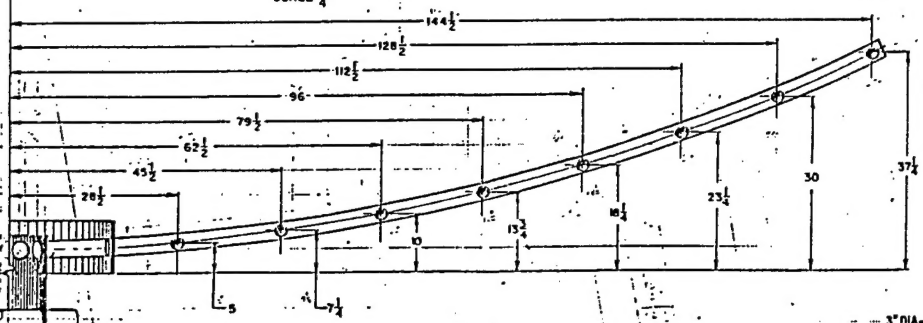

SECT. F-F

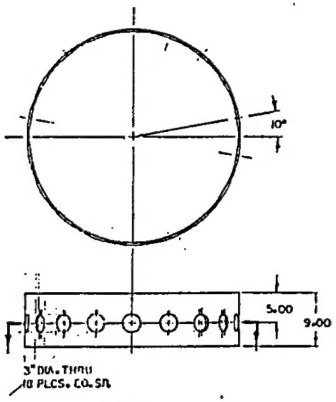

-35 DETAIL
SCALE 1/4

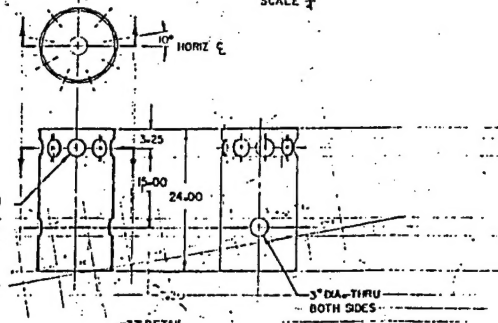

-37 DETAIL
SCALE 1/4

U.S. AIR FORCE

DISH-ASSEMBLY
SOLAR COLLECTOR
SOLAR ROCKET STUDIES

07870	E	X828160

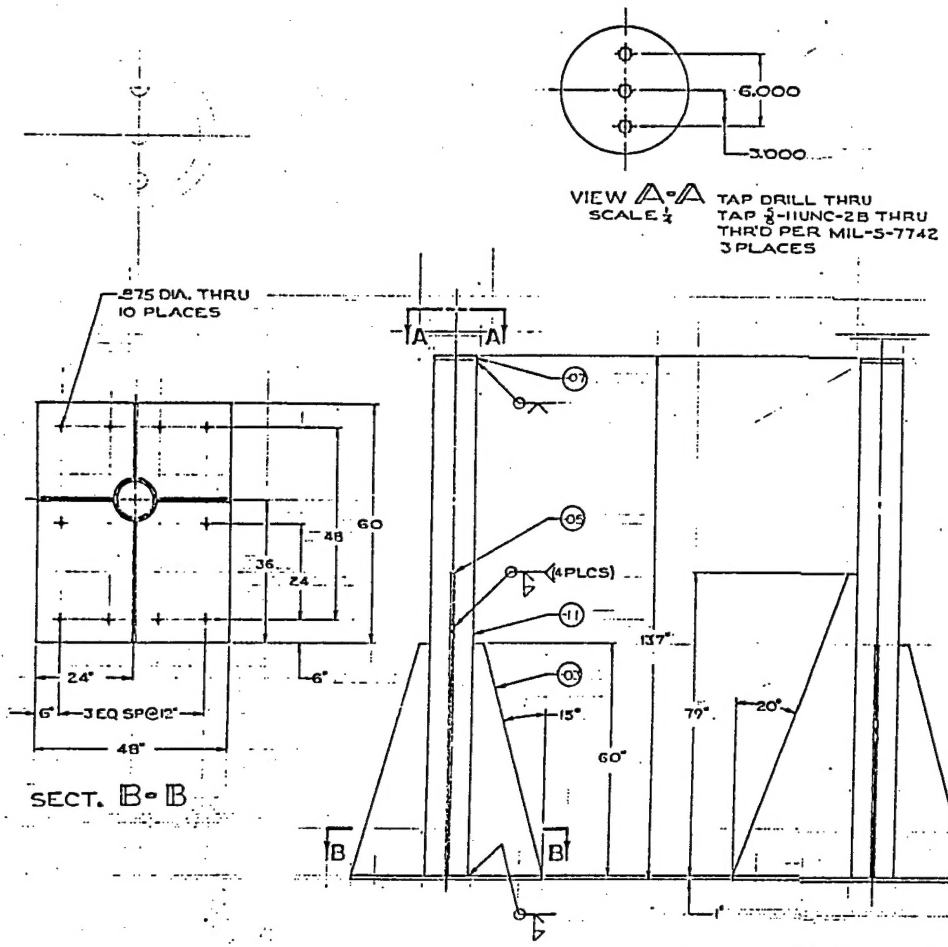

1		SUPPORT		-11	STL PIPE 10" SCH 100	
1		MTG PL		-07		11.75 DIA × 1.00
1		GUSSET		-05	QQ-S-634	79.00×30.00
3		GUSSET		-03	1020 STL PL	60.00×18.00
1		BASE PL		-01		60.00×48.00×1.00
1		SUPPORT		-10		
-10	SYM	NOMENCLATURE	CODE IDENT	NOMENCLATURE NO	MATERIAL / SPECIFICATION	NO. REQ

PARTS LIST

U.S. AIR FORCE

PEDESTAL-
SOLAR COLLEC. DISH
SOLAR ROCKET STUDY

F 07670 X828278

APPLICATION

X828278